Product Safety
Functional
Safety

www.tuv.com
ID 0600000000

Original manual

Incremental Encoder I_-58 with Functional Safety (FS)

Explosion protection housing

_A**70*



IV-58

IS-58 / IH-58



Pictures similar

Position Sensor:
DIN EN 61508/62061: SIL CL2
DIN EN ISO 13849: PL d

Speed Sensor:
DIN EN 61508/62061: SIL CL3
DIN EN ISO 13849: PL e

_Basic safety instructions
_Intended use
_General functional description
_Characteristics
_Mounting
_Installation/Commissioning
_Causes of faults and remedies

User Manual / Safety Manual

TR-ECE-BA-GB-0120v20 11/19/2026

Contents

TR Electronic GmbH
D-78647 Trossingen
Eglishalde 6
Tel.: (0049) 07425/228-0
Fax: (0049) 07425/228-33
E-mail: info@tr-electronic.de
www.tr-electronic.de

Copyright protection

This Manual, including the illustrations contained therein, is subject to copyright protection. Use of this Manual by third parties in contravention of copyright regulations is not permitted. Reproduction, translation as well as electronic and photographic archiving and modification require the written consent of the manufacturer. Violations shall be subject to claims for damages.

Subject to modifications

The right to make any changes in the interest of technical progress is reserved.

Document information

Release date / Rev. date:	11/19/2026
Document rev. no.:	TR-ECE-BA-GB-0120v20
File name:	TR-ECE-BA-GB-0120v20.docx
Author:	FRJ, KUC

Font styles

Italic or **bold** font styles are used for the title of a document or are used for highlighting.

`Courier` font displays text, which is visible on the screen and software menu selections.

″ < > ″ indicates keys on your computer keyboard (such as <RETURN>).

Brand names

Specified products, names and logos serve exclusively for information purposes and may be trademarks of their respective owners, without any special marking to indicate this.

© TR Electronic GmbH 2016, All Rights Reserved

Contents

Revision index 5

1 General information 6

1.1 Applicability 6

1.2 Other Applicable Documents 7

1.3 Abbreviations and terms used 8

1.4 General functional description 9

1.4.1 Main features 10

1.4.1.1 Variant 1 (IV58+FS01 SIN/COS, IH58+FS01 SIN/COS) 10

1.4.1.2 Variant 2 (IV58+FS01 TTL/HTL, IH58+FS01 TTL/HTL) 10

1.4.2 Principle of the safety function 10

2 Basic safety information 11

2.1 Definition of symbols and notes 11

2.2 General risks when using the product 12

2.3 IT Security Vulnerabilities 12

2.4 Residual risk 13

2.5 UL / CSA approval 13

2.6 Intended use 14

2.7 Non-intended use 14

2.8 Usage in explosive atmospheres 15

2.9 Combination measuring system and draw-wire box (IDW582) 15

2.10 Safety functions of the fail-safe processing unit 17

2.10.1 Mandatory safety checks / measures 17

2.11 Warranty and liability 18

2.12 Organizational measures 18

2.13 Personnel selection and qualification; basic obligations 19

2.14 Safety-related instructions 19

3 Transport / Storage 21

4 Technical data 22

4.1 Safety 22

4.2 Electrical characteristics, I_58 23

4.2.1 General 23

4.2.2 Device-specific 23

4.3 Ambient conditions, I_58 24

4.4 Mechanical characteristics, I_58 25

4.4.1 Solid shaft 25

4.4.2 Hollow shaft 25

5 Mounting 26

5.1 Solid shaft 27

5.1.1 Assembly of the clutch (general) 27

© TR Electronic GmbH 2016, All Rights Reserved

Contents

5.1.2 Flange installation ... 28
5.1.3 Servo clamps ... 29
5.1.4 Clamping jaws ... 30
5.2 Blind hole / hollow shaft ... 31
5.2.1 Assembly of the clamping ring (general) ... 31
5.2.2 Dowel pin / groove insert ... 32
5.2.3 Torque arm – spring steel sheet ... 34
5.2.4 Torque arm – joint head rod ... 36
5.3 Enclosure Option: Heavy Duty 115 ... 38
5.3.1 Mounting ... 38
5.3.2 Connection ... 39
5.4 Shaft turning moments (worst-case) ... 41

6 Installation / Preparation for Commissioning ... 42
6.1 EMC requirements ... 42
6.2 EMC conform wiring schemes ... 43
6.2.1 Connection scheme 1 ... 43
6.2.2 Connection scheme 2 ... 43
6.2.3 Connection scheme 3 ... 44
6.3 Ground connection – measuring system ... 45
6.4 Cable specification ... 46
6.5 Permitted cable length ... 47
6.5.1 Analog incremental signals (SIN/COS) ... 47
6.5.2 Square-wave incremental signals (TTL/HTL) ... 48
6.6 Connection - Notes ... 49
6.6.1 Order number for the connectors ... 49
6.6.1.1 Suitably for the A coded male socket M12 - 8 pin. ... 49
6.6.1.2 Suitably for the male socket M23 - 12 pin. ... 49

7 Incremental interface ... 50
7.1 Variant 1, analog incremental signals (SIN/COS) ... 51
7.2 Variant 2, square-wave incremental signals (TTL/HTL) ... 52

8 Maintenance ... 53

9 Decommissioning / demounting ... 54

10 Replacing the Measuring System ... 55

11 Accessories ... 56

12 Checklist ... 57

13 Appendix ... 58
13.1 TÜV certificate ... 58
13.2 Revision list ... 58
13.3 EU Declaration of Conformity ... 58
13.4 Pin assignment ... 58
13.5 Drawings ... 58

© TR Electronic GmbH 2016, All Rights Reserved

Revision index

Modification	Date	Index
First release	07/15/2016	00
Translation of the actual revision	01/16/2017	08
- Chapter “Permitted cable length” added - Supplementation for variant with square-wave - Requirements of the fail-safe processing unit expanded - Technical data updated	04/10/2017	09
Concretion of requirements regarding the SCS in ch. 1.4 and 2.8	04/21/2017	10
Correction of the revision of the revision list	09/27/2018	11
Order number for the connectors on chapter 6.6.1	02/07/2019	12
Warning: Surge voltages in relation to the signals SIN+, SIN–, COS+, COS–, Ref+ or Ref–	10/23/2019	13
ATEX protective housing AEV70I added	05/19/2021	14
Assembly amended by a joint head rod	06/08/2022	15
- Warning notice "Handheld radio devices", in accordance with DIN EN 61800-5-2, chapter 7.2, subsection c)	07/03/2024	16
Chapter 5.2.3 “Torque arm – spring steel sheet” added	01/30/2025	17
Reference to pollution degree 2, according to IEC 60664-1	09/09/2025	18
Safely attaching the measuring system: A form-locking is no longer required, but is only generally recommended	06/11/2026	19
General revision and alignment with CD_582	19.11.2026	20

© TR Electronic GmbH 2016, All Rights Reserved

1 General information

This Manual contains the following topics:

- General functional description
- Basic safety information with declaration of the intended use
- Characteristics
- Mounting
- Installation/Commissioning
- Error causes and remedies

As the documentation is arranged in a modular structure, this User Manual is supplementary to other documentation, such as product data sheets, dimensional drawings and brochures, etc.

1.1 Applicability

This User Manual applies exclusively for measuring system series in accordance with the following keys for the article numbers and type code with ***incremental interface*** and ***functional safety***:

See revision list:
www.tr-electronic.de/f/TR-ECE-TI-DGB-0389

The measuring system stands out due to 2 variants which are distinguished in the chapter “Main features” on page 10.

© TR Electronic GmbH 2016, All Rights Reserved

The products are labeled with affixed nameplates and are components of a system.

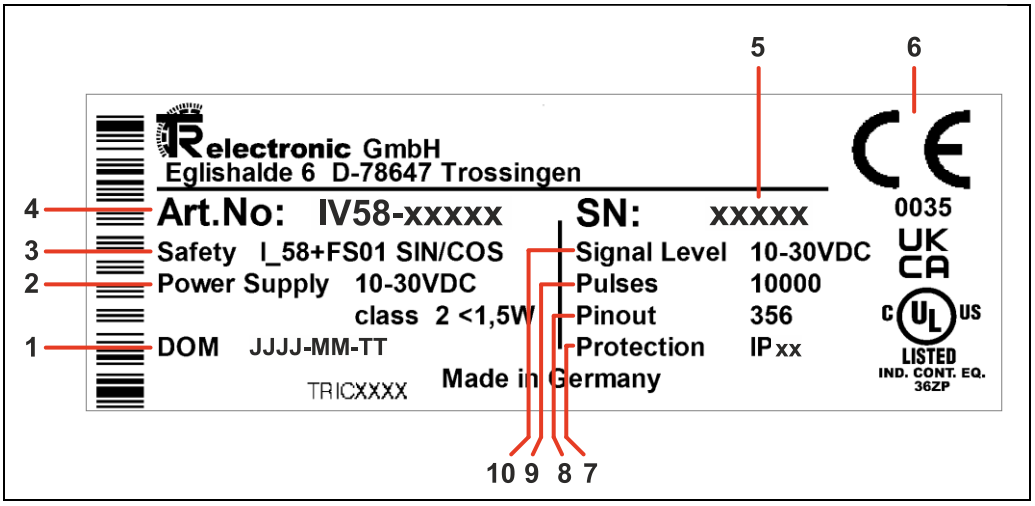

1	Date of manufacture in the format YYYY: year, MM: month, DD: day
2	- Supply voltage range, maximum power consumption, see -> device-specific product data sheet - Class 2 power supply with UL/CSA approval - see chapter 2.5 on page 13.
3	Measuring system – interface / security protocol, see -> interface-specific user manual
4	Article Number or Order Number
5	Devices – Serial no.
6	Approvals
7	IP rating (IP-Code), to DIN EN 60529
8	Number or identifier of the enclosed pin assignment
9	Resolution in steps per revolution
10	Signal output level

1.2 Other Applicable Documents

- operator's operating instructions specific to the system
- this User Manual
- Pin assignment
- Interface-specific user manual
- Product data sheet
- Optional: Ex User Manual

© TR Electronic GmbH 2016, All Rights Reserved

1.3 Abbreviations and terms used

A**70*	Explosion protection housing Ø 70 mm with built-in measuring system, all variants
I_58	Incremental encoder, all designs
DC_{avg}	***D***iagnostic ***C***overage Average diagnostic coverage
ESD	***E***lectro ***S***tatic ***D***ischarge
EU	***E***uropean ***U***nion
EMC	***E***lectro***M***agnetic ***C***ompatibility
Functional safety (FS)	Part of the overall system safety, which depends on the correct functioning of safety-related systems for risk reduction. Functional safety is ensured when each safety function is executed as specified.
Fault exclusion	Compromise between the technical safety requirements and the theoretical possibility of an error occurring
HTL	***H***igh-***T***hreshold-***L***ogic
IEC	International Electrotechnical Commission
IEEE	***I***nstitute of ***E***lectrical and ***E***lectronics ***E***ngineers
ISO	***I***nternational ***S***tandard ***O***rganization
$MTTF_d$	***M***ean ***T***ime ***T***o ***F***ailure (dangerous) Mean time until dangerous failure
PFD_{av}	***Av***erage ***P***robability of ***F***ailure on ***D***emand Average probability of failure of a safety function with low demand
PFH	***P***robability of ***F***ailure per ***H***our Operating mode with high requirement rate or continuous demand. Probability of dangerous failure per hour.
PFH_D	***P***robability of a **d**angerous ***F***ailure per ***H***our Average probability of a dangerous failure per hour according to ISO 13849-1.
PL	***P***erformance ***L***evel, according to ISO 13849-1: Discrete level, which specifies the capability of safety-related parts of a control to execute a safety function under foreseeable conditions.
SIL	***S***afety ***I***ntegrity ***L***evel, according to IEC 62061: Four discrete levels (SIL1 to SIL4). The higher the SIL of a safety-related system, the lower the probability that the system cannot execute the required safety functions.
SIS	***S***afety ***I***nstrumented ***S***ystem: is used to protect a dangerous process and reduce the risk of an accident. Process instruments are a constituent of a Safety Instrumented System. This comprises the essential components of a complete safety-relevant process unit: Sensor, fail-safe processing unit (control) and actuator
SCS	***S***afety ***C***omputer ***S***ystem with control function
Standard measuring system	Definition: Safety-related measuring system, without explosion protection
STP	***S***hielded ***T***wisted ***P***air
TTL	***T***ransistor-***T***ransistor-***L***ogic (RS422)
VDE	***V***erband ***d***er ***E***lektrotechnik, Elektronik und Informationstechnik (Association for Electrical, Electronic and Information Technologies)
Repeat test (proof test)	Repetitive test to detect hidden dangerous failures in a safety-related system.

© TR Electronic GmbH 2016, All Rights Reserved

1.4 General functional description

The rotary measuring system is a safe and incremental position measuring system.

The measuring system has been designed so that it can be used in systems which require the following safety functions according to EN 61800-5-2:

- Safe Direction (SDI)
- Safe Stop 1 (SS1)
- Safe Stop 2 (SS2)
- Safe Operating Stop (SOS)
- Safely Limited Speed (SLS)
- Safe Speed Range (SSR)
- Safe Speed Monitor (SSM)
- Safely-Limited Acceleration (SLA)
- Safe Acceleration Range (SAR)
- Safely-Limited Position (SLP)
- Safely-Limited Increment (SLI)
- Safe Cam (SCA)

The measuring system as a sensor is always part of a safety chain.

The following shaft designs can be used for the mechanical coupling:

- Solid shaft
- Blind shaft
- Hollow shaft



-Protective housing:
The mechanical coupling can only be made via a solid shaft.

Depending on the safety functions safety-related differences arise:

- SIL3/PLe/Cat.3, in conjunction with velocity oriented safety functions
- SIL2/PLd/Cat.3, in conjunction with positioning oriented safety functions

see chapter “Safety” -> “Functional safety” on page 22.

© TR Electronic GmbH 2016, All Rights Reserved

1.4.1 Main features

The entire system electronics has a discrete design. Neither microcontrollers nor programmable logic elements are contained in the system electronics. There is no interpolation or signal multiplexing. All signal lines are led separately within the electronics.

1.4.1.1 Variant 1 (IV58+FS01 SIN/COS, IH58+FS01 SIN/COS)

Incremental interface with analog output signals SIN±, COS± and Ref±; output level 1 Vss.
The safety-evaluated measuring system is designed for the implementation of safety-related functions in relation to speed and direction of rotation. In the downstream fail-safe processing unit an ideal error detection also occurs through evaluation of the annulus relationship “$SIN(x)^2 + COS(x)^2 = 1$”.
The Ref± reference signals are not evaluated from a safety viewpoint and may not be used for safety-oriented purposes.

1.4.1.2 Variant 2 (IV58+FS01 TTL/HTL, IH58+FS01 TTL/HTL)

Incremental interface with digital square-wave output signals K1±, K2± and K0±; output level in TTL or HTL logic.
The safety-evaluated measuring system is designed for the implementation of safety-related functions in relation to speed and direction of rotation.
An internal signal monitor constantly checks the annulus relationship "$SIN(x)^2 + COS(x)^2 = 1$". Safety-relevant errors are indicated by switching of the signal outputs to tri-state. The K0± reference signals are not evaluated from a safety viewpoint and may not be used for safety-oriented purposes.

1.4.2 Principle of the safety function

System safety results when:

- the scanning channel is single fault safe thanks to its own diagnostic measures and circuit measures
- the control checks that the received incremental data meet the expected tolerance window according to the application.
- for variant 1, the control also checks the annulus relationship $SIN(x)^2 + COS(x)^2 = 1$; if the result is outside the tolerance range, the incremental data must be evaluated as unsafe. In this way the control achieves an ideal error detection.
- when errors are detected the control introduces appropriate safety measures defined by the system manufacturer
- the system manufacturer ensures, through correct mounting of the measuring system, that the measuring system is always driven by the axis to be measured and is not overloaded. A fault exclusion is required for mounting the measuring system to the drive function.
- the system manufacturer carries out a proven test during commissioning
- the downstream fail-safe processing unit evaluates the measuring system differentially

© TR Electronic GmbH 2016, All Rights Reserved

2 Basic safety information

2.1 Definition of symbols and notes

⚠ DANGER	means that death or serious injury will occur if the required precautions are not met.
⚠ WARNING	means that death or serious injury can occur if the required precautions are not met.
⚠ CAUTION	means that minor injuries can occur if the required precautions are not met.
NOTICE	means that damage to property can occur if the required precautions are not met.
	indicates important information or features and application tips for the product used.
	means that appropriate protective measures against ESD according to DIN EN 61340 5-1 Supplement 1 must be applied.

© TR Electronic GmbH 2016, All Rights Reserved

2.2 General risks when using the product

The product, hereinafter referred to as ***the measuring system***, is manufactured according to state-of-the-art technology and accepted safety rules. ***Nevertheless, non-intended use can pose a danger to life and limb of the user or third parties, or lead to impairment of the measuring system or other property!***
Only use the measuring system in perfect technical condition, paying attention to safety and dangers, and in compliance with the ***User Manual***! Faults which could threaten safety should be eliminated without delay!

2.3 IT Security Vulnerabilities

The measuring system has a sensor interface with a point-to-point connection to a downstream evaluation unit. The measuring system does not contain any software. No confidential information is stored on the device itself. By default, the point-to-point connections are not secured against attacks, such as MITM (man-in-the-middle).

The following notes and recommendations are intended to protect against tampering with the device:

- Physical access to the measuring system, its ports, and the corresponding connections to the downstream evaluation unit should be restricted or limited.
- The cabling between the measuring system and the downstream evaluation unit should be protected against unauthorized access, e.g., by using shielded cables.
- Access to the measuring system's power supply must be assessed in accordance with the requirements of EN 50742 and protected accordingly.
- Access to the downstream evaluation unit lies outside the security context of the measurement system and must be assessed in accordance with the requirements of EN 50742 and protected accordingly.
- To detect tampering, it is recommended to seal the connections on the measuring system and the downstream control unit.
- Vulnerabilities must be reported to the PSIRT at TR°Electronic°GmbH (www.tr-electronic.de/psirt). The security contacts at TR°Electronic°GmbH can be reached via the canonical URI „www.tr-electronic.de/.well-known/security.txt “.

© TR Electronic GmbH 2016, All Rights Reserved

2.4 Residual risk

According to EN ISO 12100-1 “Safety of machinery – Basic concepts, general principles for design”, residual risk is defined as the risk remaining after application of all protective measures.
Risk itself is defined as the “combination of the likelihood of a hazard and the severity of the potential damage”.

During the entire safety lifecycle, TR Electronic has applied risk minimizing measures and methods according to the state of the art and technology – however, residual risks still remain even when properly using the measuring system!

Residual risks are not only indicated in this chapter, but also in all relevant parts of the entire document, in some cases also by referencing the corresponding interface-specific user manual.

The risk assessment of the entire system required by the EU Machinery Directive requires knowledge of all ***Other Applicable Documents***, including any documented general conditions, safety instructions and residual risks, and to incorporate such into the company’s own risk assessment.

2.5 UL / CSA approval

The nameplate of measuring systems with this approval carry the UL symbol:

c UL US
LISTED
IND. CONT. EQ.
36ZP
Class 2
File No.: E300802

Measuring system running UL applications may therefore only be operated on NEC Class 2 approved power supply units. For further information, please refer to this document: TR-ECE-TI-DGB-0152

© TR Electronic GmbH 2016, All Rights Reserved

2.6 Intended use

The safety measuring system can be used for the detection of angular movement and processing of measured data for a downstream safety computer system in systems in which the **protection goals** of **"Protection of speed"** and **"Protection of direction of movement"** must be safely achieved. The complete processing chain of the safety function must then satisfy the requirements of the applied safety standard.
The safety measuring system may only be used in safety applications in conjunction with a control certified according to the applied safety standard.
The system manufacturer must check that the characteristics of the measuring system satisfy his application-specific safety requirements. The responsibility or decision regarding the use of the measuring system lies with the system manufacturer.

Intended use also includes:

- observing all instructions in this User Manual,
- observing the nameplate and any prohibition or instruction symbols on the measuring system,
- observing the enclosed documentation, e.g. product insert, pin assignment etc.
- observing the operating instructions from the machine/system manufacturer,
- operating the measuring system within the limit values specified in the technical data,
- ensuring that the fail-safe processing unit fulfills all required safety functions,
- observing and using the checklist in the appendix,
- safe mounting (form closure; recommended) of the measuring system to the driving axis, also see chapter "Mounting" from page 26

2.7 Non-intended use

Danger of death, physical injury and damage to property in case of non-intended use of the measuring system!

⚠ WARNING

NOTICE

- The following areas of use are especially forbidden:
  - standard measuring-system:
    in environments with an explosive atmosphere according to the ATEX Directive
  - for medical purposes in accordance with the Medical Devices Directive
  - as a step or climbing aid
  - for wiring as antitwist protection (torque arm)
  - as an abutment for tension chains and belts

© TR Electronic GmbH 2016, All Rights Reserved

2.8 Usage in explosive atmospheres

When used in explosive atmospheres, the standard measuring system has to be installed in an appropriate explosion protective enclosure and subject to requirements.

The products are labeled with an additional marking on the nameplate.

The “intended use” as well as any information on the safe usage of the ATEX-compliant measuring system in explosive atmospheres are contained in the User Manual.

Standard measuring systems that are installed in the explosion protection enclosure and are intended for use with safety instrumented applications can therefore be used in explosive atmospheres.

When the measuring system is installed in the explosion protection enclosure, which means that it meets explosion protection requirements, the properties of the measuring system will no longer be as they were originally.

Following the specifications in the User Manual, please check whether the properties defined in that manual meet the application-specific requirements.

Fail-safe usage requires additional measures and requirements. Such measures and requirements must be determined prior to initial commissioning and must be taken and met accordingly.

2.9 Combination measuring system and draw-wire box (IDW582)

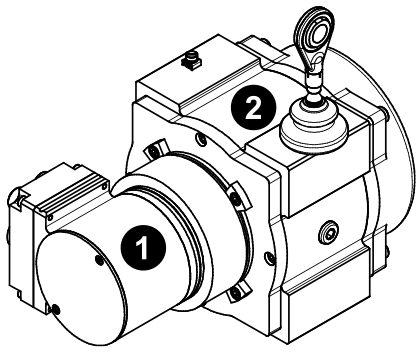

❶: Measuring system

Device type 1 with SIL value or PL value

❷: Draw-wire box

Device type 3 with B10d value

Figure 1: Combination measuring system and draw-wire box

© TR Electronic GmbH 2016, All Rights Reserved

From a safety viewpoint the combination of measuring system and draw-wire box is a series connection with a device type 1 (measuring system) and a device type 3 with a category 1 structure in accordance with EN ISO 13849-1 (draw-wire box).

Device type 1 is characterized by the fact that the device can already be used as the safety-relevant part of a control system.

Device type 3 refers to devices with a failure behavior which is dependent on the switching frequency (cycle) and in terms of the draw-wire corresponds to complete extension and retraction of the wire. This fact is expressed by the **B10d-value** and represents the average number of cycles by which 10 % of the components have failed dangerously. The draw-wire box has not been developed in accordance with any specific safety standard, but this does not in principle exclude its use in accordance with DIN EN 61508, EN ISO 13849-1 or IEC 62061.

Generally, however, the use of such devices, if they are used as a safety-relevant part of a control system, must be independently assessed by the user in relation to safety.

As the combination of measuring system and draw-wire box is a series connection, this "unified structure" must be reassessed in relation to safety. The component with the lowest reliability in the series connection is determining for the highest possible level of safety that can be achieved. For mechanical reasons draw-wires only have a limited number of cycles, which in turn is strongly dependent on the type used.

In practice this means that the draw-wire is the limiting component in the series connection and the safety requirement level of the measuring system can never be achieved for the unified structure. For this reason there is also no TÜV certification for the combination of measuring system and draw-wire box!

This fact means that the unified structure may only be used as the subsystem of a safety function if the safety requirement level of the unified structure corresponds to the required safety requirement level for the subsystem.

To enable the user to assess the safety function, TR Electronic provides the relevant safety indicators in the product data sheets valid for the respective measuring system,
see www.tr-electronic.com/s/S027269.

TR Electronic can provide the relevant B10d value for the draw-wire box on request.

1) The $MTTF_d$ value for the draw-wire box can be calculated as follows:

$$MTTF_d = \frac{B10_d}{0.1 * n_{op}}$$

The total $MTTF_d$ value for the draw-wire box + measuring system can be calculated from this:

$$MTTF_{d\ (total)} = \frac{(\ MTTF_{d\ (draw\text{-}wire\ box)}\ *\ MTTF_{d\ (measuring\ system)}\ )}{(\ MTTF_{d\ (draw\text{-}wire\ box)}\ +\ MTTF_{d\ (Mess\text{-}System)}\ )} = \text{value in years [a]}$$

1) Abbreviations, also see page 8

© TR Electronic GmbH 2016, All Rights Reserved

2.10 Safety functions of the fail-safe processing unit

The **S**afety **C**omputer **S**ystem (SCS), to which the measuring system is connected, must perform the following safety checks.
With regard to "Single fault safety" and "Ideal error detection" please see IFA directive "GS-IFA-M21". This can be downloaded under the following link:
www.tr-electronic.com/f/zip/TR-E-TI-DGB-0107

To enable the correct measures to be taken in the case of error, the following applies:



- **Safe state – passive, only for measuring system variant 1**
  In passive safe state the measuring system does not output any valid SIN±/COS± – signals to the downstream fail-safe processing unit. The processing unit detects the error through evaluation of the annulus relationship $SIN(x)^2 + COS(x)^2 = 1$. If the result is outside the tolerance range, the incremental data are evaluated as unsafe. The downstream fail-safe processing unit has an ideal error detection.
- **Safe state – active, only for measuring system variant 2**
  In active safe state the signal outputs are switched to tri-state. The processing unit detects the error via an implemented cable breakage detection.

2.10.1 Mandatory safety checks / measures

Measures for commissioning, changes	SCS error reaction
Check that the desired automation task is executed as required.	STOP

Check by the SCS	SCS error reaction
Check of incremental data according to the present automation task and safety function.	STOP
Two-channel monitoring of incremental outputs for cable breakage.	For tri-state state -> STOP
Only for variant 1 Evaluation of the condition $SIN(x)^2 + COS(x)^2 = 1$. The number of checks / revolution corresponds to the number of periods/revolution: 1024, 2048 or 4096 For the safety functions SDI, SS1, SS2, SOS, SSR, SSM an annulus monitoring with DC = 90 % is required. For the SLS safety function a two-channel evaluation of the frequency from (SIN/COS) with a DC of 90 % is required.	If outside tolerance -> STOP
Only for variant 2 A cable break detection is required for the evaluation of the square pulse signals. In the safe state, the output drivers are in tri-state (high-resistance state).	If a cable break is detected -> STOP
Only for variant 2 Evaluation of the incremental data in differential mode and verification with respect to antivalence, quadrature and against phase equivalence between channels A and B	If outside tolerance -> STOP

© TR Electronic GmbH 2016, All Rights Reserved

2.11 Warranty and liability

In principle the "General Terms and Conditions" of TR Electronic GmbH apply. These are available to the operator with the Order Confirmation or when the contract is concluded at the latest. Warranty and liability claims in the case of personal injury or damage to property are excluded if they result from one or more of the following causes:

- Non-intended use of the measuring system.
- Incorrect mounting, installation and commissioning of the measuring system.
- Work carried out incorrectly on the measuring system.
- Operation of the measuring system with technical defects.
- Unauthorized mechanical or electrical modifications to the measuring system.
- Unauthorized repairs.
- Third party interference and acts of God.

2.12 Organizational measures

- The User Manual must always be kept ready-to-hand at the place of use of the measuring system.
- In addition to the User Manual, the generally valid legal and other binding regulations on accident prevention and environmental protection must be observed and communicated.
- The respective applicable national, local and system-specific provisions and requirements must be observed and communicated.
- The operator is obliged to inform personnel about special operating features and requirements.
- Prior to commencing work, personnel working with the measuring system must have read and understood the chapter "Basic safety information".
- The type plate and any prohibition or instruction symbols applied on the measuring system must always be maintained in a legible state.
- Do not undertake any mechanical or electrical modifications to the measuring system, except for those expressly described in this User Manual.
- Repairs may only be undertaken by the manufacturer or a center or person authorized by the manufacturer.

© TR Electronic GmbH 2016, All Rights Reserved

2.13 Personnel selection and qualification; basic obligations

- All work on the measuring system must only be carried out by qualified personnel.

  Qualified personnel includes persons, who, through their training, experience and instruction, as well as their knowledge of the relevant standards, provisions, accident prevention regulations and operating conditions, have been authorized by the persons responsible for the system to carry out the required work and are able to recognize and avoid potential hazards.

- The definition of “qualified personnel” also includes an understanding of the standards VDE 0105-100 and IEC 364 (source: e.g. Beuth Verlag GmbH, VDE-Verlag GmbH).

- The responsibility for assembly, installation, commissioning and operation must be clearly defined. The obligation exists to provide supervision for trainee personnel.

2.14 Safety-related instructions

⚠ WARNING

NOTICE

- **Destruction, damage and malfunction of the measuring system!**
  - Wiring work may only be carried out and electrical connections only be opened and closed while the system is de-energized.
  - Do not undertake any welding work if the measuring system is already wired or switched on.
  - Falling below or exceeding the permissible ambient temperature limit values must be prevented through an appropriate heating/cooling measure at the place of installation.
  - The measuring system must be installed so that no direct moisture can affect the measuring system.
  - Suitable aeration/ventilation and heating/cooling measures must be provided at the place of installation to prevent the temperature falling below the dew point (condensation).
  - If overvoltages of >7 V DC are inadvertently applied at the incremental analog output signals SIN+, SIN–, COS+, COS–, Ref+ or Ref–, the measuring system must be inspected at the factory, with specification of the reasons or circumstances. The measuring system must be shut down immediately.
  - Potential hazards resulting from interactions with other systems and equipment which are or will be installed in the vicinity must be checked. The user is responsible for taking appropriate measures.
  - The power supply must be protected with a fuse suitable for the supply lead cross-section.
  - Cables used must be suitable for the temperature range.
  - A defective measuring system must not be operated.
  - Make sure that the installation environment is protected from aggressive media (acids etc.)

…

© TR Electronic GmbH 2016, All Rights Reserved

…

⚠ WARNING

NOTICE

- Avoid shocks (e.g., hammer blows) to the shaft during installation / demounting.
- It is prohibited to open the measuring system.
- Connector plugs of the measuring system that are unused during storage, operation and/or demounting of the system have to be provided either with a mating connector or a protective cap. The IP degree of protection is to be selected according to requirements.
- The measuring system is designed for use in environments with pollution degree 2 according to IEC 60664-1: “Only non-conductive pollution occurs; however, temporary conductivity due to condensation must be expected occasionally” (e.g., due to hand perspiration). Therefore, care must be taken during installation to ensure that pollution degree 2 is maintained. This applies in particular to the installation of connections, the attachment of protective caps to unconnected connections, and the replacement of the device.
- The type plate specifies the technical characteristics of the measuring system. If the type plate is no longer legible or if the type plate is completely missing, the measuring system must not be operated.
- The measuring system cannot detect a break in the coupling or the torque arm. The operator must include this circumstance in the safety concept of the system.

⚠ WARNING

NOTICE

- **Deactivation of the safety function by radiation-bound sources of interference**

Handheld radio devices that are operated within a radius of less than 20 cm of the power drive system (e.g. motor, frequency converter, measuring system, etc.) can deactivate the safety function of the measuring system or the safety sub-function of the complete power drive system.

- It must be ensured that handheld radio devices can only be operated at a distance of more than 20 cm from the measuring system.



The measuring system contains components and assemblies susceptible to electrical discharge, which can be destroyed if incorrectly handled.

- Touching the measuring system connection contacts with the fingers must be avoided, or the relevant ESD protective measures must be applied.



Disposal

- If disposal has to be undertaken after the lifespan of the device, the applicable country-specific regulations must be observed.

© TR Electronic GmbH 2016, All Rights Reserved

3 Transport / Storage

- Shipping information
  - Do not drop the device or subject it to heavy impacts!
    The device contains an optical system.
  - Use only the original packaging!
    Inappropriate packaging material may cause damage to the device in transit.

- Storage
  - Storage temperature: -40 to +90 °C
  - Store in a dry place

© TR Electronic GmbH 2016, All Rights Reserved

4 Technical data

4.1 Safety

Functional safety

DIN EN 61508 Part 1-7	**S**afety **I**ntegrity **L**evel (SIL):
- [1] SDI, SS1, SS2, SOS, SLP, SLI, SCA	- 2
- [1] SLS, SSR, SSM, SLA, SAR	- 3
EN ISO 13849-1	**P**erformance **L**evel:
- [1] SDI, SS1, SS2, SOS, SLP, SLI, SCA	- PLd / Cat. 3
- [1] SLS, SSR, SSM, SLA, SAR	- PLe / Cat. 3

Startup time	Time between POWER-UP and safe incremental output
Variant 1	≤ 30 ms
Variant 2	≤ 50 ms

PFH / PFH_D, "High demand" operating mode

Variant 1	5.34 * 10^{-9} 1/h
Variant 2	6.57 * 10^{-9} 1/h
Notice	Measuring system is used only in applications with high or continuous demand rate

$MTTF_d$	high
Variant 1	1558 a
Variant 2	622 a
[2] DC_{avg}	medium (90 %)
Internal process safety time	Time between occurrence of an F-error and alarm indication
Overall system	≤ 1 ms
Process safety angle	Angle between error occurrence and alarm indication
Through channel-internal self-diagnosis	± 0.3510°, at 1024 periods; ± 0.1760°, at 2048 periods; ± 0.0879°, at 4096 periods; in relation to the measuring system shaft
T_1, repeat test (proof test)	20 years

[1] according to EN 61800-5-2

[2] The assessment occurred in accordance with Note 2 on Table 6 of EN ISO 13849-1

© TR Electronic GmbH 2016, All Rights Reserved

4.2 Electrical characteristics, I_58

4.2.1 General

Supply voltage ..... 10…30 V DC according to IEC 60364-4-41, SELV/PELV
- Reverse polarity protection ..... yes
- Short-circuit protection ..... yes, by internal 1 A safety fuse
- Overvoltage protection ..... yes, up to ≤ 60 V DC
- Protection class ..... DIN EN 61140

Power consumption without load ..... at 24 V DC
- Analog output signals ..... < 20 mA
- Square-wave output signals ..... < 40 mA

Insulation voltage ..... 500 V

Pollution degree 2 ..... IEC 60664-1

4.2.2 Device-specific

Accuracy
- Usable resolution ..... 10 bit, 11 bit, 12 bit; depending on the device configuration
- Safety-related ..... + 2 bit interpolated
- Functional ..... + 8 bit interpolated

Variant 1

Incremental analog output signals
- Periods / revolution ..... 1024, 2048, 4096 acc. to device variant
- Incremental signals ..... SIN+, SIN–, COS+, COS–
- Track position, electrical ..... 90 °
- Reference signals ..... Ref+, Ref–, once per revolution
- Output level ..... 1 Vss ± 0.2 V at 100 Ω, differential
- Output current ..... 20 mA
- Output frequency ..... ≤ 500 KHz
- Short-circuit proof ..... yes, incremental signals and reference signals among each other, but not in relation to the supply voltage
- Cable specification ..... see page 46

© TR Electronic GmbH 2016, All Rights Reserved

Variant 2

Incremental square-wave output signals

Pulses / revolution	1024, 2048, 4096 acc. to device variant
Incremental signals	K1+, K1–, K2+, K2–
Track position, electrical	90 °
Zero pulse	K0+, K0–, once per revolution
Output level TTL	EIA standard RS422 (2-wire)
Output level HTL	Push-pull, supply voltage
Output current	50 mA, per channel
Output frequency	≤ 100 KHz
Short-circuit proof	yes
Cable specification	see page 46

4.3 Ambient conditions, I_58

Vibration

DIN EN 60068-2-6	≤ 100 m/s², sine 50-2000 Hz

Shock

DIN EN 60068-2-27	≤ 1000 m/s², half sine 11 ms

EMC

Immunity to disturbance	EN 61000-6-2
Transient emissions	EN 61000-6-3

Magnetic fields	DIN EN 61000-4-8
Parameter	30 A/m
Criterion	A
Spatial direction	X, Y, Z
Working temperature	-40…+90 °C
Derating Hollow shaft, > 3000 rpm	Ta = 90 – 0,0062 * (n – 3000) in °C
Storage temperature	-40 °…+90 °C, dry
Relative air humidity, DIN EN 60068-3-4	98 %, non-condensing

[3] Protection class, DIN EN 60529

Shaft side	IP 65
Housing side	IP 67
Installation height	≤ 5000 m üNHN

[3] valid with screwed-on mating connector and/or screwed-on cable gland

© TR Electronic GmbH 2016, All Rights Reserved

4.4 Mechanical characteristics, I_58

4.4.1 Solid shaft

Mechanically permissible speed ..... ≤ 12,000 rpm

Electrically permissible speed

$n_{electric}$ [rpm] = (output frequency [Hz] / no. of pulses per rev.) * 60 rpm

Bearing life ..... ≥ 3.9 * 10^{10} revolutions at

- Speed ..... ≤ 6000 rpm
- Operating temperature ..... ≤ 60 °C
- Shaft load, flange + 10 mm ..... ≤ 50 N axial, ≤ 100 N radial
- Degree of contamination ..... normal

Permissible angular acceleration ..... ≤ 10^4 rad/s^2

Moment of inertia, typical ..... 4.9 * 10^{-6} kg m^2

Start-up torque

- at 20 °C ..... 3.4 Ncm
- at 0 °C ..... 3.6 Ncm
- at -20 °C ..... 7.8 Ncm
- at -40 °C ..... 20 Ncm

Weight, typical ..... 0.3…0.5 kg

4.4.2 Hollow shaft

Mechanically permissible speed ..... ≤ 6,000 rpm

- Note ..... Observe Derating for permissible working temperature

Electrically permissible speed

$n_{electric}$ [rpm] = (output frequency [Hz] / no. of pulses per rev.) * 60 rpm

Shaft load, axial/radial ..... Own mass

Bearing life ..... ≥ 3.9 * 10^{10} revolutions at

- Speed ..... ≤ 6000 rpm
- Operating temperature ..... ≤ 60 °C
- Degree of contamination ..... normal

Permissible angular acceleration ..... ≤ 10^4 rad/s^2

Moment of inertia, typical ..... 8.8 * 10^{-6} kg m^2

Start-up torque

- at 20 °C ..... 3.4 Ncm
- at 0 °C ..... 3.6 Ncm
- at -20 °C ..... 3.8 Ncm
- at -40 °C ..... 16 Ncm

Runout tolerance ..... ± 0.05 mm

Weight, typical ..... 0.3…0.5 kg

© TR Electronic GmbH 2016, All Rights Reserved

5 Mounting

- **If the safety functions are deactivated because of an unstable shaft drive, there will be the danger of death, serious physical injury and/or damage to property!**
  - ➢ The system manufacturer must ensure "**Failure Exclusion**" through design measures: The mechanical coupling of the measuring system via the shaft and its mounting must be guaranteed at all times. To this end, the requirements of the following standards, each under the heading "Adjustable speed electrical power drive systems – Safety requirements," must be complied with:
    - DIN EN 61800-5-2:2017: Complete drive systems
      – in particular Table D.8: "Motion and position feedback sensors
    - DIN EN IEC 61800-5-3:2024: Safety instrumented measuring system (Encoder)
      – in particular Table G.1: "Mechanic fault list and fault exclusions"

⚠ DANGER

NOTICE

- ➢ As a general rule, it is recommended to prevent radial slippage of the measuring system on the drive shaft by using a parallel key / groove combination to ensure a form-locking.
- ➢ In general, the requirements and acceptance conditions for the complete system must be taken into account when the measuring system is attached.
- ➢ All fastening screws must be secured such that they cannot be loosened accidentally.
- ➢ In case of applications with low ambient temperatures, the start-up torque will be increased. This fact must be taken into account during assembly and when providing the shaft drive.



Due to the variety of measurement system series and the variety of types within a measurement system series, the following text and dimensions information must be considered as exemplary and have to be adapted to the specific product.

© TR Electronic GmbH 2016, All Rights Reserved

5.1 Solid shaft

As the installation situation is application-dependent, the following notes are not exhaustive.

5.1.1 Assembly of the clutch (general)

- Dimensions, as well as individual mounting options, can be found in the customer-specific drawing.
- A suitable coupling with form closure must be used for the application. When used in potentially explosive atmospheres, the coupling must have the appropriate approval, see Ex-User Manual. The coupling must be dimensioned so that fault exclusion is ensured for the mechanical mounting of the measuring system in accordance with DIN EN 61800-5-2, depending on the static and dynamic load cases. If this is not possible, the hazard must be incorporated into the risk assessment for the application in the form of a coupling breakage.
- The coupling manufacturer's information and installation requirements must be observed.
- In particular, you must ensure that
  the coupling is suitable for the specified speed and the potential axial offset,
  installation is on a grease-free shaft,
  the coupling and the measuring system are not axially loaded,
  the clamping screws are tightened with the torque defined by the coupling manufacturer,
  the coupling screws are secured against unintentional loosening.
- Axial slipping of the measuring system on the drive shaft must be prevented by the coupling fixing, see Figure 2, (1).
- General recommendation: Radial slipping of the measuring system on the drive shaft should be prevented by a form-locking connection, using a parallel key / groove combination for example (Chapter: 5.1.2 Figure 2, (2)); a coupling with groove can be used for this purpose.
- General recommendation: Radial slipping (slip) of the clutch on the drive shaft and the measuring system on the clutch should be prevented by means of form closure by using a parallel key / groove combination (Figure 2, (2)); a coupling with groove can be used for this purpose.

© TR Electronic GmbH 2016, All Rights Reserved

5.1.2 Flange installation

- Dimensions, as well as individual mounting options, can be found in the customer-specific drawing.
- On the machine side, the measuring system is mounted to the flange (centering collar) with three screws.
- The flange plate for mounting the flange on the machine must have a suitable centering collar.
- The screws must be tightened with a tightening torque of 2.2 Nm and secured against unintentional loosening with a medium-strength screw locking device.
  - Ensure the thread is sufficiently long for the screws to be completely screwed in.
- The assembly instructions for the assembly of the coupling must be observed, see Chapter: 5.1.1 “Assembly of the clutch (general)”.

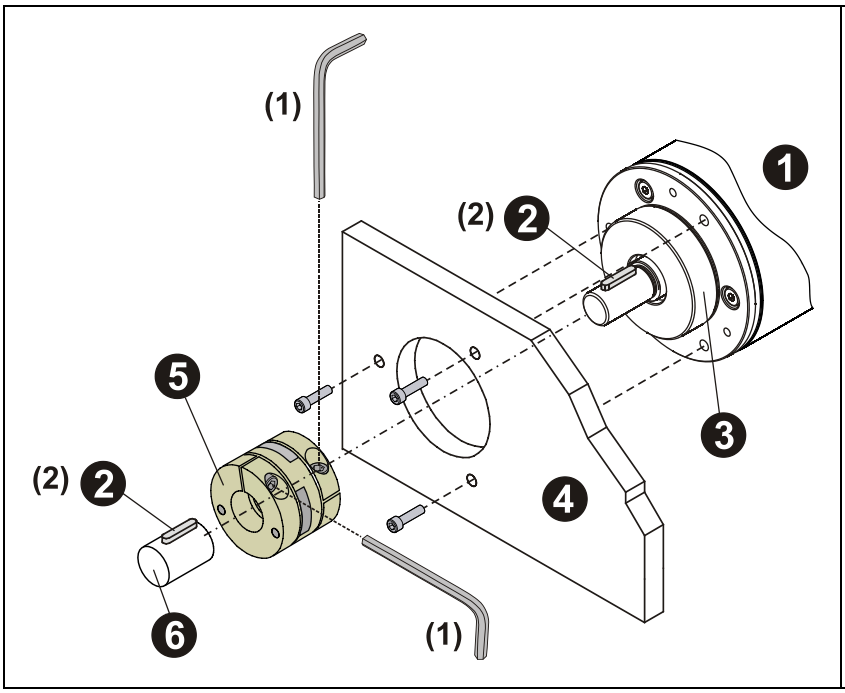

Components:

1: Measuring system
2: Parallel key, according to article number in the referenced drawing
3: Centering collar
4: Flange plate (machine)
5: Coupling with groove
6: Drive shaft

Figure 2: Installing the flange, illustration showing the principle

© TR Electronic GmbH 2016, All Rights Reserved

5.1.3 Servo clamps

- Dimensions, as well as individual mounting options, can be found in the customer-specific drawing.
- 3 servo clamps are used for the assembly. The servo clamps are distributed around the measuring system and offset by 120° and are each fastened to the flange plate with an M4 screw.
- The flange plate for mounting the flange on the machine must have a suitable centering collar.
- Use M4 steel screws (recommended: coated steel screws, e.g. galvanized) with a strength class of min. 6.8 (recommended: 8.8) to attach the servo clamps to the flange plate.
  - Depending on the environmental conditions, stainless steel screws with a strength class of at least 70 should be used.
- The M4 screws must be tightened with a tightening torque of 2.2 Nm and secured against unintentional loosening with a medium-strength screw locking device.
  - Ensure the thread is sufficiently long for the screws to be completely screwed in.
- The minimum thread reach into the flange plate is 4 mm in steel and 6 mm in aluminum.
- The surfaces to be secured should be free of any lubricants or dirt.
- The type of servo clamps must match the outer diameter of the flange ring and mounted according to the “up” orientation.
  - Correctly oriented servo clamps will lie flat on the flange plate when the key engages the flange groove.
- The assembly instructions for the assembly of the coupling must be observed, see Chapter: 5.1.1 “Assembly of the clutch (general)”.

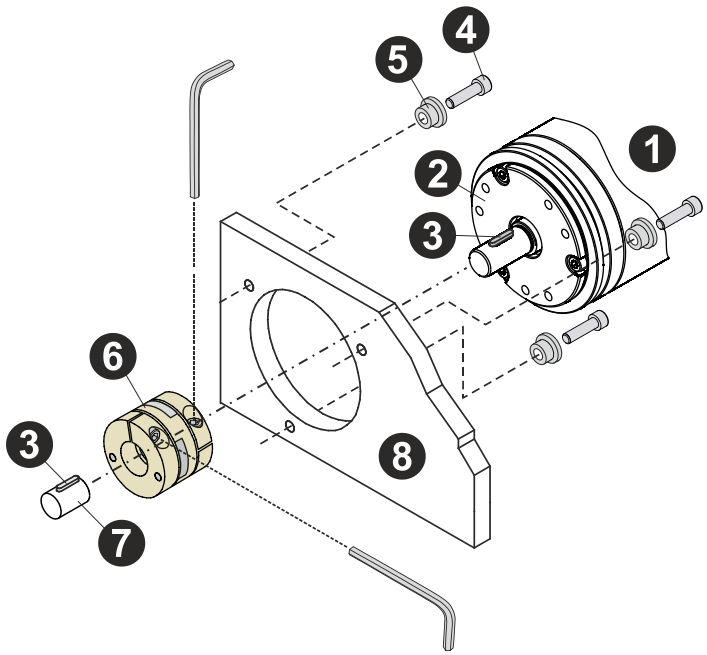

Components:

1: Measuring system
2: Centering collar
3: Parallel key, according to article number in the referenced drawing
4: 3x M4 screws
5: 3x servo clamps
6: Coupling with groove
7: Drive shaft
8: Flange plate (machine)

Figure 3: Assembly with servo clamps, illustration showing the principle

© TR Electronic GmbH 2016, All Rights Reserved

5.1.4 Clamping jaws

- Dimensions, as well as individual mounting options, can be found in the customer-specific drawing.
- 2 clamping jaws are used for assembly, which should be offset, if possible, by 180° and fastened to the flange plate with two M4 screws each.
- Use M4 steel screws (recommended: coated steel screws, e.g. galvanized) with a strength class of min. 6.8 (recommended: 8.8) to attach the clamping jaws to the flange plate.
  - Depending on the environmental conditions, stainless steel screws with a strength class of at least 70 should be used.
- The M4 screws must be tightened with a tightening torque of 2.2 Nm and secured against unintentional loosening with a medium-strength screw locking device.
  - Ensure the thread is sufficiently long for the screws to be completely screwed in.
- The minimum thread reach into the flange plate is 4 mm in steel and 6 mm in aluminum.
- The surfaces to be secured should be free of any lubricants or dirt.
- The type of clamping jaws must match the outer diameter of the flange ring and mounted according to the “up” orientation.
  - Correctly oriented clamping jaws will lie flat on the flange plate when the key engages the flange groove.
- The specifications for mounting the clamping claws in relation to the pitch circle of the threaded holes must be observed so that the clamping jaw can engage in the flange groove.
- The assembly instructions for the assembly of the coupling must be observed, see Chapter: 5.1.1 “Assembly of the clutch (general)”.

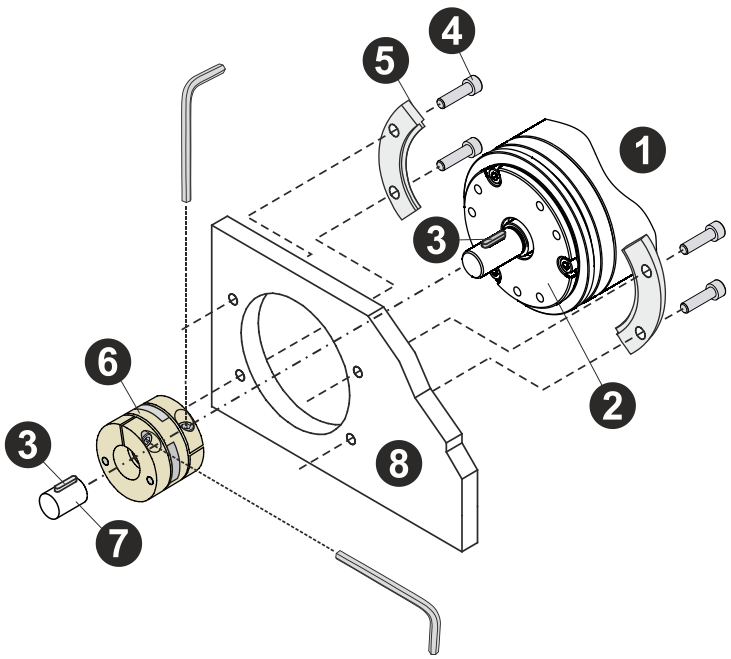

Components:

1: Measuring system
2: Centering collar
3: Parallel key, according to article number in the referenced drawing
4: 4x M4 screws
5: 2x clamping jaws
6: Coupling with groove
7: Drive shaft
8: Flange plate (machine)

Figure 4: Assembly with clamping jaws, illustration showing the principle

© TR Electronic GmbH 2016, All Rights Reserved

5.2 Blind hole / hollow shaft

The following instructions are not exhaustive as the assembly situation may be different for each application.

5.2.1 Assembly of the clamping ring (general)

- Dimensions, as well as individual mounting options, can be found in the customer-specific drawing.
- The measuring system must be installed on a grease-free shaft.
- Axial slipping of the measuring system on the drive shaft must be prevented by fixing the clamping ring in position.
  - Further measures may be required to prevent axial slipping of the measuring system.
- There may be no axial load on the clamping mechanism of the measuring system.
- The screw of the clamping ring must be tightened with 2 Nm using a torque wrench and secured against unintentional loosening with a medium-strength screw locking device.
- General recommendation: Radial slipping of the measuring system on the drive shaft should be prevented by a form-locking connection, using a parallel key / groove combination for example.

Requirement for the customer-provided shaft:

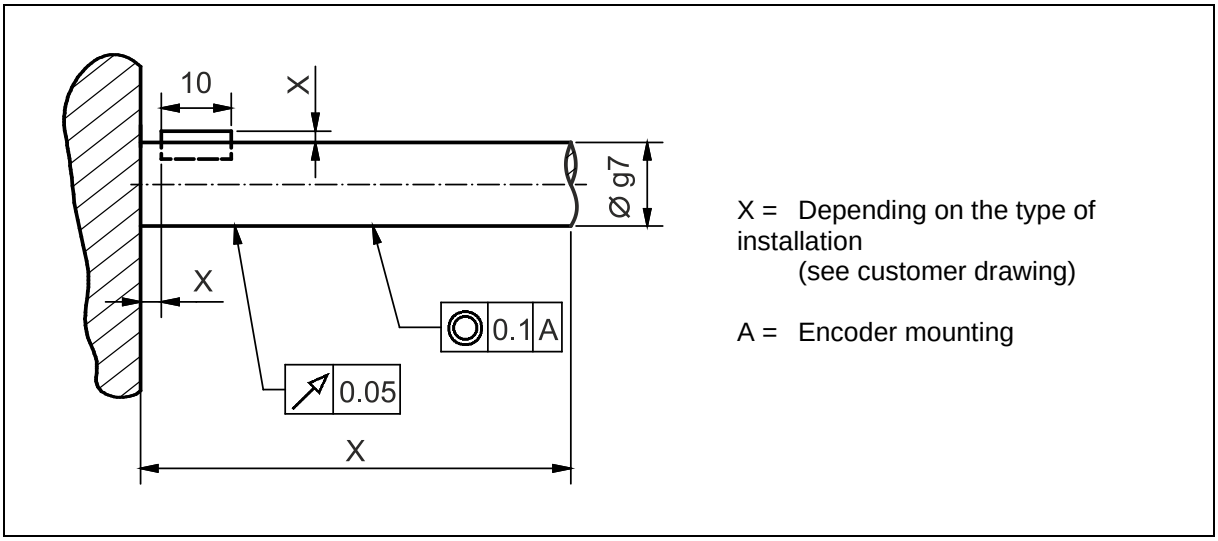

Figure 5: Requirement for the customer-provided shaft

© TR Electronic GmbH 2016, All Rights Reserved

5.2.2 Dowel pin / groove insert

- Dimensions, as well as individual mounting options, can be found in the customer-specific drawing.
- A dowel pin is used to fix the measuring system on the drive end, see Figure 6
- The dowel pin must extend at least 4 mm into the groove insert, max. 5.5 nm. The distance from the measuring system flange Y to the customer-provided device plane X must be > 1.5 mm, see Figure 7
- The assembly instructions for the assembly of the clamping ring must be observed, see Chapter: 5.2.1 „Assembly of the clamping ring (general)“.

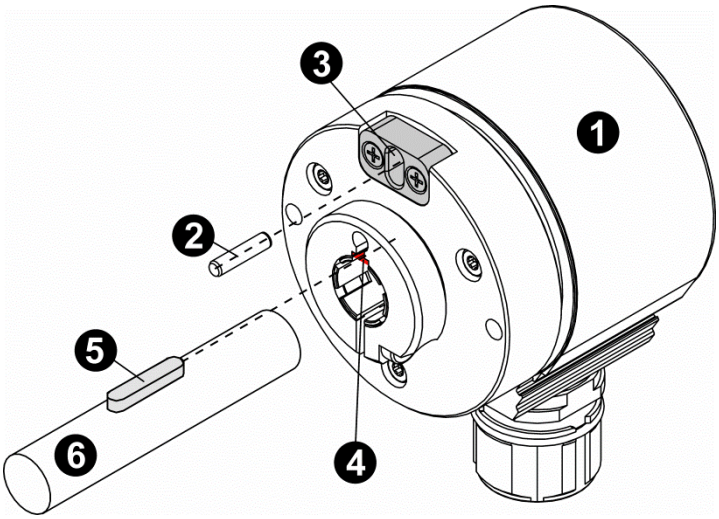

1: Measuring system
2: Dowel pin
3: Groove insert 4K7, 6 mm deep
4: Groove, 4 mm x 4 mm
5: Parallel key
6: Drive shaft

Figure 6: Interference fit

© TR Electronic GmbH 2016, All Rights Reserved

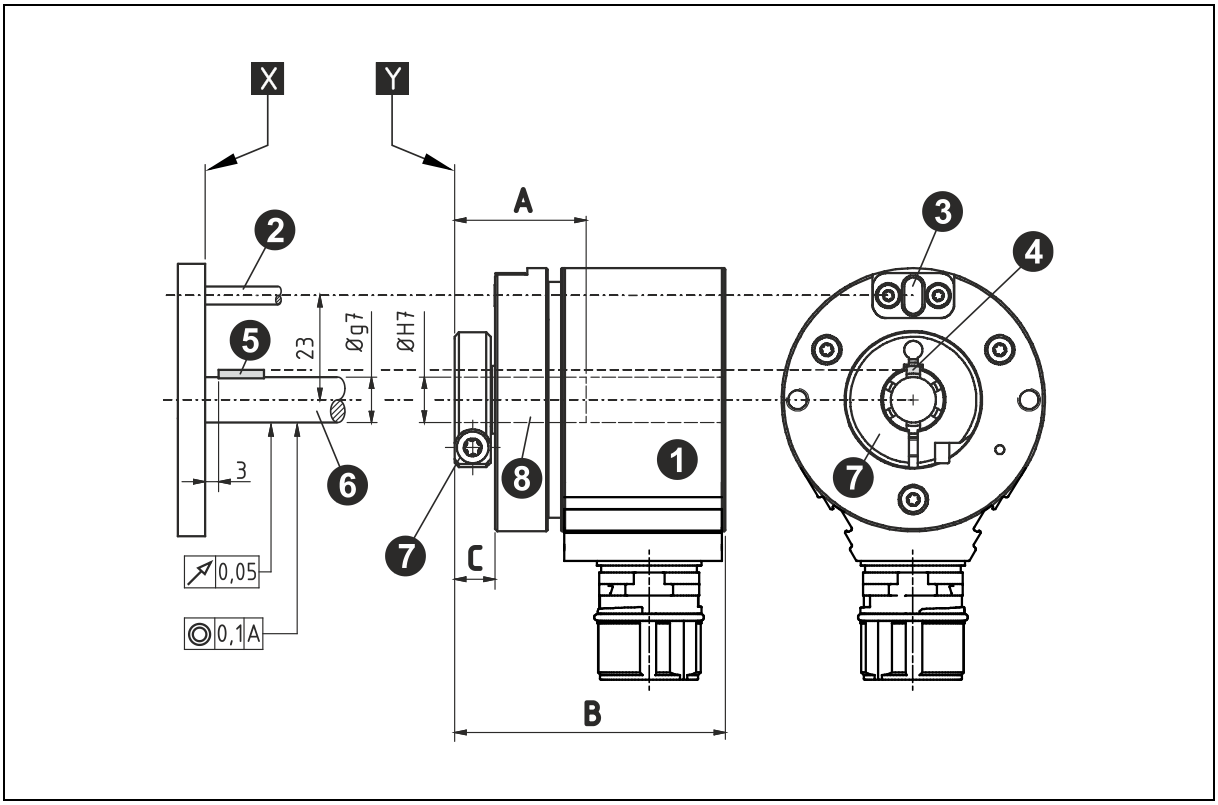

Figure 7: Installation with dowel pin and groove insert, illustration showing the principle

Components:

1: Measuring system with blind hole or hollow shaft
(H7 fit, according to article number in referenced drawing)

2: Dowel pin, provided by customer: Diameter 4 mm with m6 fit
Length = distance between reference planes X and Y + deviation C + an immersion depth of 4 ... 5.5 mm

3: Groove insert 4K7, 6 mm deep

4: Groove, according to the article number in the referenced drawing

5: Parallel key, according to the article number in the referenced drawing

6: Drive shaft with g7 fit, provided by customer

7: Clamping ring with screw, tightening torque = 2 Nm, secured against loosening

8: Measuring system – shaft with H7 fit, according to article number in referenced drawing

Dimensions:

A: Immersion depth for model with blind-hole shaft, according to article number in referenced drawing

B: Immersion depth for model with hollow shaft, according to article number in referenced drawing

C: Clamping ring width, according to the article number in the referenced drawing

Reference planes, minimum clearance:

X: customer-provided device plane

Y: front surface of clamping ring

Minimum clearance: > 1.5 mm

© TR Electronic GmbH 2016, All Rights Reserved

5.2.3 Torque arm – spring steel sheet

⚠ DANGER

- **Danger of death, serious physical injury and/or damage to property if the safety functions are deactivated by loosening the torque arm!**

NOTICE

➢ The installation specifications described below must be strictly observed.

➢ Dimensions, as well as individual mounting options, can be found in the customer-specific drawing.

➢ The ambient conditions specified in the article number-specific data sheet, the shaft load, and the axially and radially permissible shaft movement tolerances must be observed.

➢ Dead-line assembly in idle state.

➢ Push the measuring system onto the drive shaft.

➢ Each of the three torque arm wings must be attached to the machine with two M3 cheese head screws and suitable washers.

- The sheet metals must not be warped or prestressed.
- The screw connections must be secured against unintentional loosening with medium-strength screw locking devices.
- The nominal tightening torque for an M3 coarse-pitch thread applies according to the strength class of the screw. Minimum tightening torque 0.5 Nm.

➢ Attach the clamping ring to the drive shaft with the clamping ring screw and apply a 2 Nm tightening torque. The torque arm must not be warped or prestressed.

➢ The torque arm is corrosion resistant in an industrial atmosphere. Special ambient conditions / media must be clarified with TR Electronic.

➢ Improperly mounted or damaged torque arms must not be used.

➢ The assembly instructions for the assembly of the clamping ring must be observed, see Chapter: 5.2.1 „Assembly of the clamping ring (general)“.

© TR Electronic GmbH 2016, All Rights Reserved

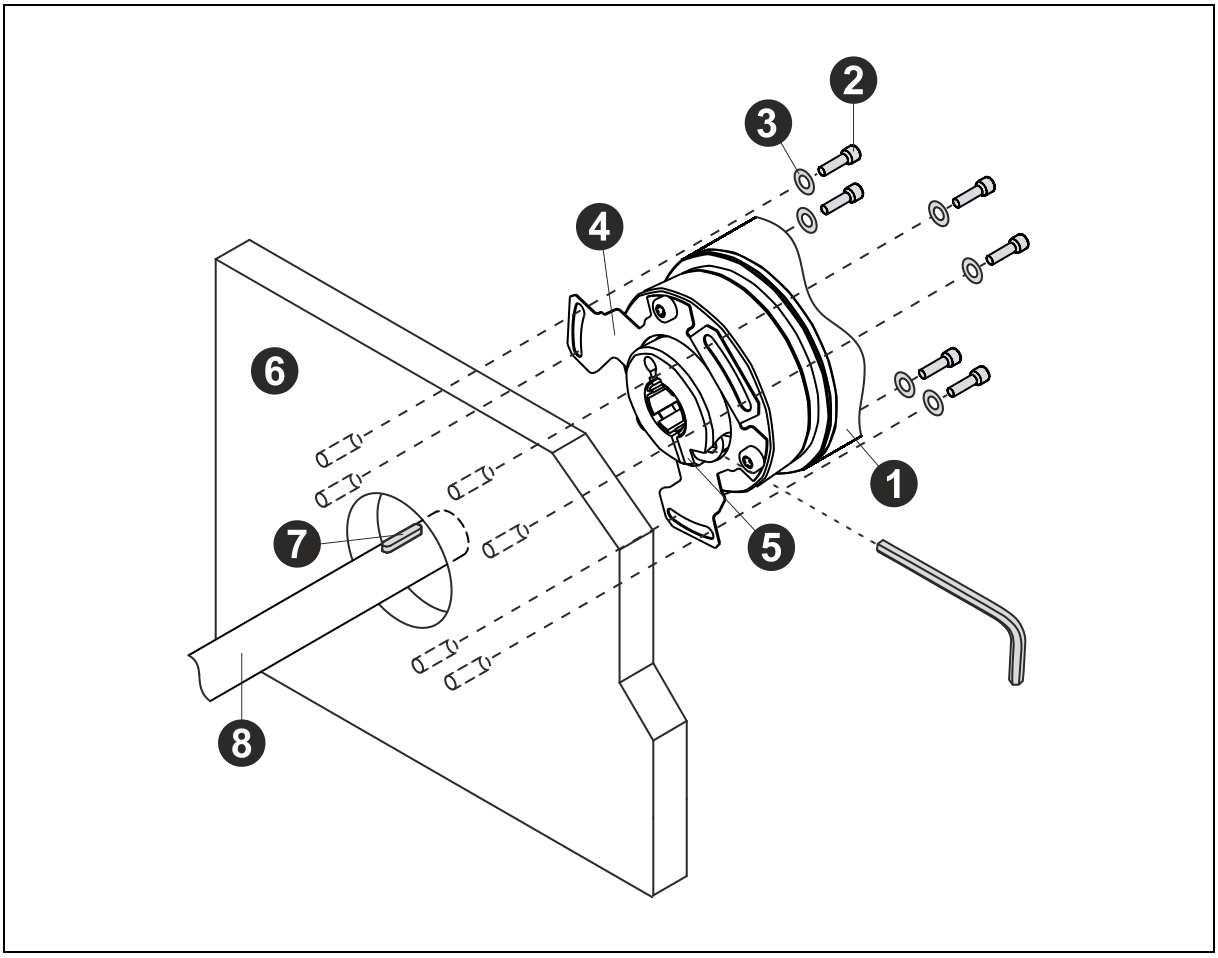

Figure 8: Assembly with torque arm (spring steel sheet), illustration showing the principle

Components:

1: Measuring system with H7 fit, according to article number in referenced drawing
2: 6x cheese head screw M3
3: 6x washer
4: Torque arm, according to the article number in the referenced drawing
5: Clamping ring with screw, tightening torque = 2 Nm, secured against loosening
6: Flange plate (machine)
7: Parallel key, according to the article number in the referenced drawing
8: Drive shaft with g7 fit, provided by customer

© TR Electronic GmbH 2016, All Rights Reserved

5.2.4 Torque arm – joint head rod

- Please refer to the customer-specific drawing for any variations in size and individual assembly options. Please refer to the manufacturer's individual technical data for joint head rod specifications, such as the permissible tilt angle of the joint head.
- Two joint heads, a threaded rod and two M5 cheese head screws are required for assembly. See Chapter: 11 "Accessories".
- Attach the joint head rod to one of the two M5 threaded holes when mounting it to the measuring system flange.
- For maximum support of the measuring system, the joint head rod must be mounted at a 90° angle to the line connecting the threaded hole to the center of the shaft, see Figure 11.
- The M5 screws must be tightened with a tightening torque of 2.2 Nm and secured against unintentional loosening with a medium-strength screw locking device.
  - Ensure the thread is sufficiently long for the screws to be completely screwed in.
- The minimum thread reach into the flange plate is 4 mm in steel and 6 mm in aluminum. The minimum thread reach into the measuring system flange is 6 mm.
- The mounting surfaces should be free of any lubricants or dirt.
- The assembly instructions for the assembly of the clamping ring must be observed, see Chapter: 5.2.1 „Assembly of the clamping ring (general)".

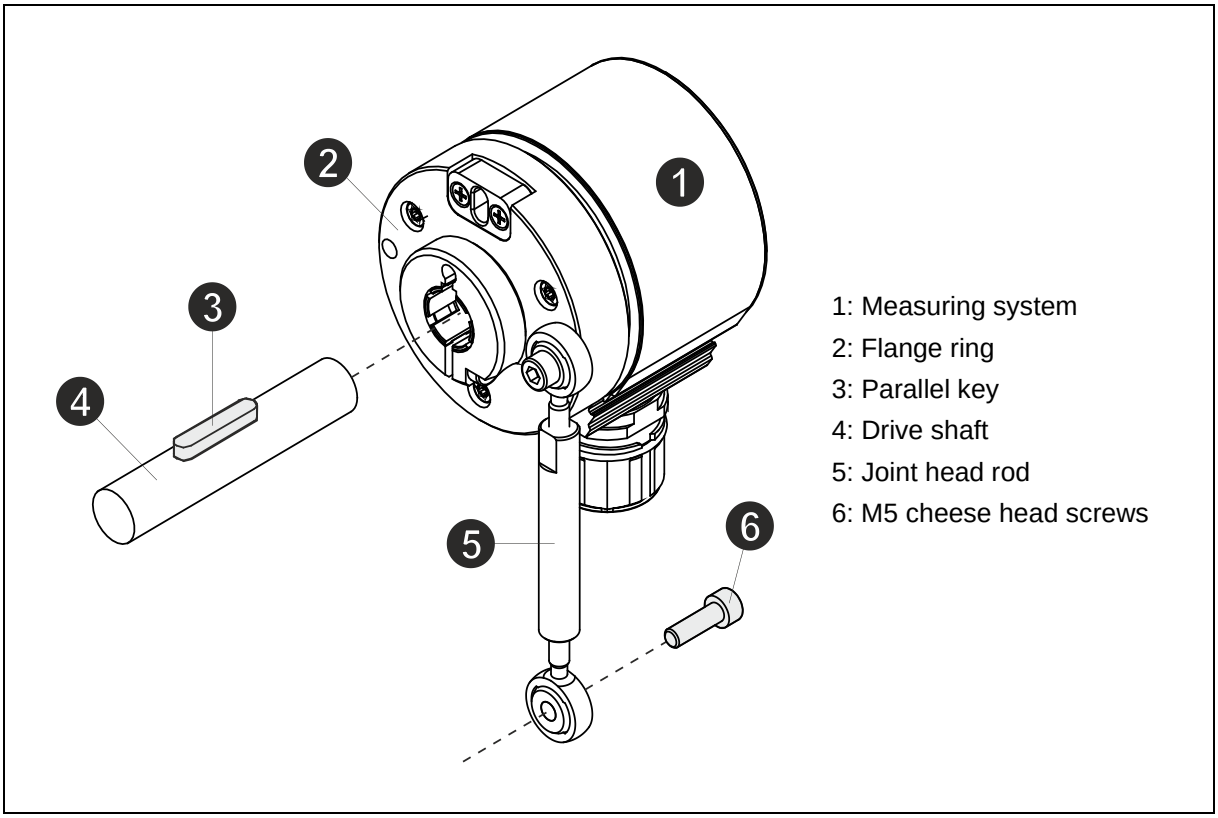

Figure 9: Interference fit and joint head rod

© TR Electronic GmbH 2016, All Rights Reserved

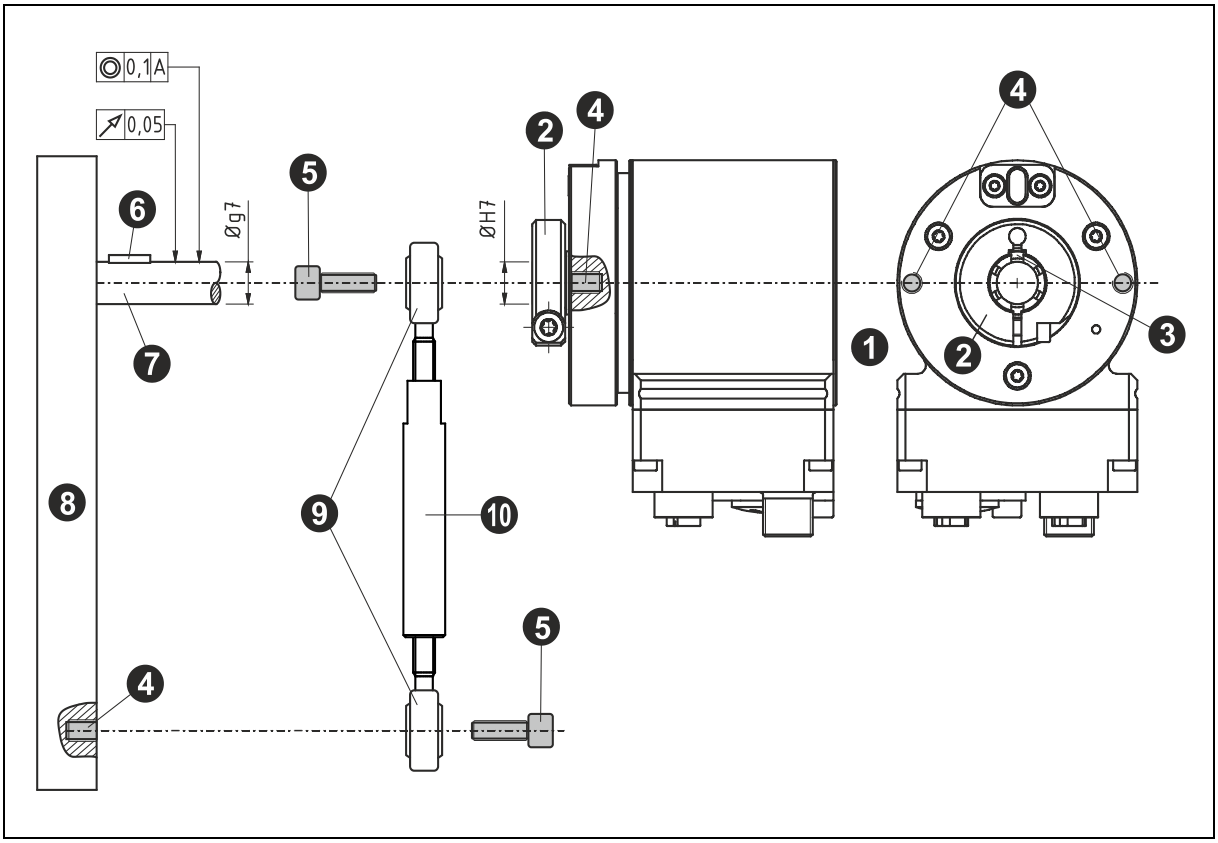

Figure 10: Assembly with joint head rod, illustration showing the principle

Components:

1: Measuring system with blind hole or hollow shaft
(H7 fit, according to article number in referenced drawing)
2: Clamping ring with screw
3: Groove, according to the article number in the referenced drawing
4: M5 threaded hole
5: 2x M5 cheese head screws
6: Parallel key, according to the article number in the referenced drawing
7: Drive shaft with g7 fit, provided by customer
8: Flange plate (machine)
9: 2x joint head
10: Threaded rod

Mounting variants:

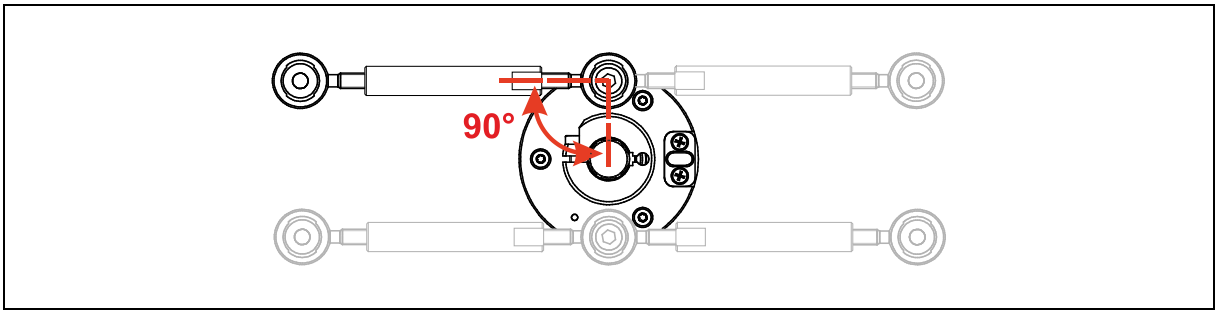

Figure 11: Joint head rod – mounting variants

© TR Electronic GmbH 2016, All Rights Reserved

5.3 Enclosure Option: Heavy Duty 115

5.3.1 Mounting

- The measuring system installed in a heavy duty 115 enclosure is mounted on the machine side using six screws through the device flange.
- The centering collar with the fit j6 centers the shaft. The customer's flange plate should have a suitable centering collar.
- The mounting base only carries the weight of the measuring system and must be screwed to the mounting surface with four screws without tension.
- All screws must be tightened to the appropriate torque and secured against unintentional loosening with medium-strength thread locker.
  - Make sure that the thread length is sufficient and that the screws can be screwed in completely.
- The assembly instructions for coupling assembly must be observed, see chapter: 5.1.1 “Assembly of the clutch (general)”.

- Dimensions are to be taken from the customer-specific drawing.
- Tolerance specifications of the coupling manufacturer must be taken into account.

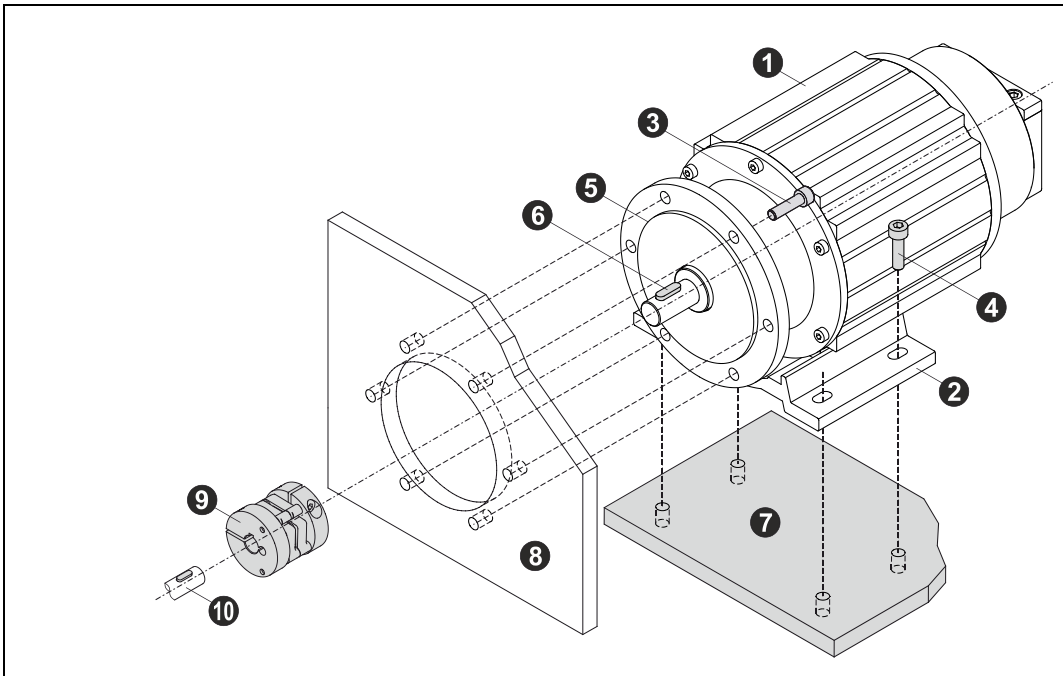

Components:

1: Measuring system	6: Parallel key
2: Mounting base	7: Mounting surface *
3: 6x M6, Allen screws *	8: Flange plate (machine) *
4: 4x M6, Allen screws *	9: Coupling with groove *
5: Device flange with centering collar	10: Drive shaft *

Figure 12: Mounting example, heavy duty 115 enclosure

* Customer side

© TR Electronic GmbH 2016, All Rights Reserved

5.3.2 Connection

For measuring systems that are installed in an optional heavy duty 115 enclosure, the following steps must be observed when connecting:

Step 1:

Remove the 4x cylinder head screws from the cable entry module using a 4 mm Allen key. Remove the cable entry module from the cover hood and disassemble it.

The sealing plugs in the grommets must be removed according to the number and position of the cables used.

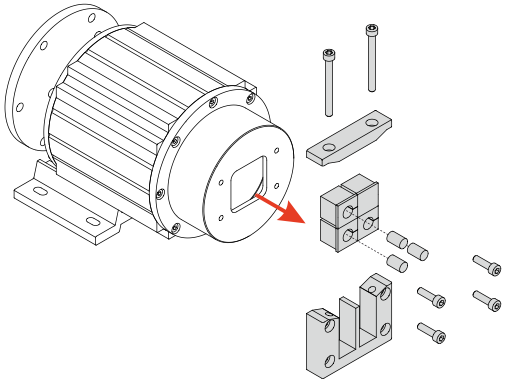

Step 2:

Remove the 8x cylinder head screws from the cover using a 3 mm Allen key. Pull the cover hood off the enclosure tube.

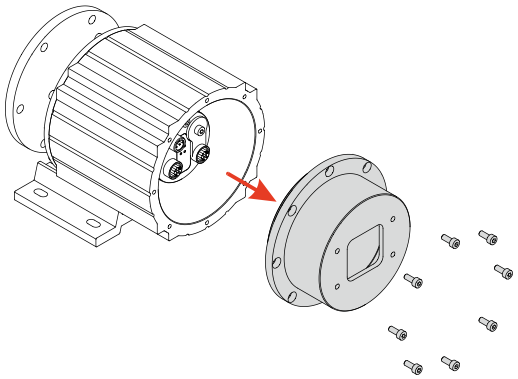

Step 3:

Feed the signal and supply lines one after the other through the opening in the cover hood.

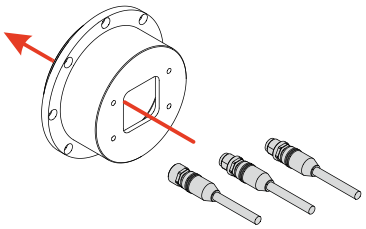

Step 4:

Connect the signal and supply lines to the measuring system and screw them tight.

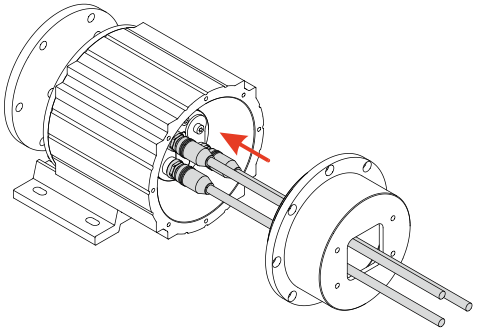

© TR Electronic GmbH 2016, All Rights Reserved

Step 5:

Screw the cover hood back onto the housing tube using the 8x M4x10 cylinder head screws.

Note the alignment of the cover hood!

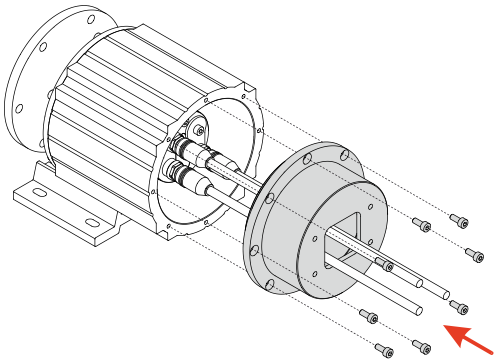

Step 6:

Place the grommets around the cables so that they are flush with the cover hood.

To ensure that the seal is tight, the individual installation direction of the grommets in relation to one another and the plug pattern of the installed measuring system must be observed. The sizes of the grommets must be selected according to the cable diameter.

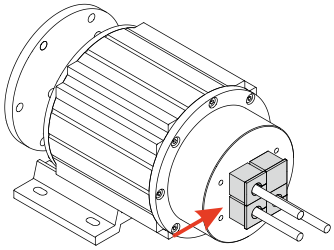

Step 7:

Slide the frame of the cable entry module onto the grommets and pull it up to the stop of the cover. Screw the cable entry module tightly together with the 2x cylinder head screws.

To ensure a tight seal, the frame and the yoke (cover) of the cable entry module must be positioned with the rubberized sealing side facing the cover hood.

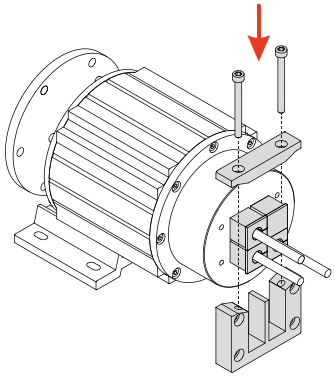

Step 8:

Screw the cable entry module to the cover hood using the 4x M5x18 cylinder head screws.

Care must be taken to ensure that the installation of the cable entry module does not exert too much pressure on the cables and thus on the measuring system!

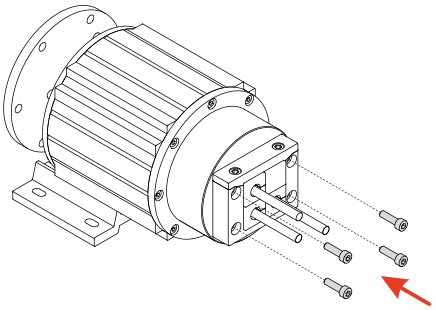

© TR Electronic GmbH 2016, All Rights Reserved

5.4 Shaft turning moments (worst-case)

Temperature [°C]	Break-away torques / Start-up torques in [Ncm] at +6 σ			
	1 (IP67, IV)	**2** (IP65, IH)	**3** (IP65, IV)	**4** (Option 115)
20	5.76 / 4.67	3.93 / 3.76	0.46 / 0.34	5,7 / 5,4
0	17.16 / 10.13	8.26 / 5.75	1.74 / 1.43	5,8 / 5,5
-20	24.30 / 9.86	10.29 / 8.04	5.41 / 3.59	13,7 / 6,7
-40	25.85 / 11.67	22.90 / 16.60	8.73 / 7.30	14,7 / 11,7

The break-away torque is the maximum torque that occurs after the temperature load to set the shaft in motion. The start-up torque must be applied after breaking to set the shaft in motion. The difference between break-away torque and start-up torque arises, e.g. through ice formation at low temperatures.

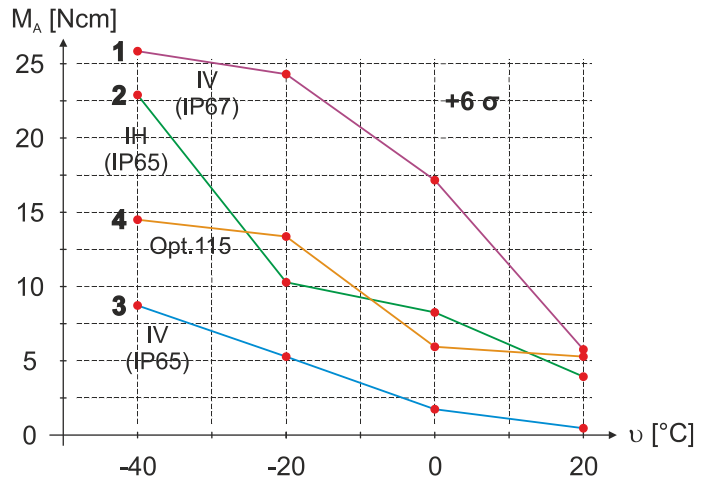

MA: Break-away torque
ϑ: Temperature

At +6 Sigma

Figure 13: Break-away torques

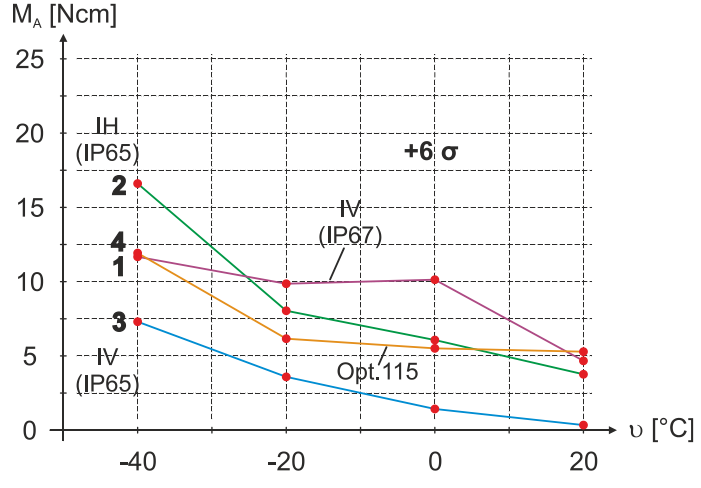

MA: Start-up torque
ϑ: Temperature

At +6 Sigma

Figure 14: Start-up torques

© TR Electronic GmbH 2016, All Rights Reserved

6 Installation / Preparation for Commissioning

6.1 EMC requirements

⚠ WARNING ***Deactivation of the safety function due to radiated or conducted interference sources!***

- Radiated interference sources due to radiophones, lightning strikes in networks, mobile phones and emissions from individual devices can cause malfunctions in the measuring system.
- Conducted interference sources in particular, such as frequency-controlled drives (system perturbations), have a negative effect on the function of the measuring system.
  - The 24 V power supplies used must fulfil the requirements according to IEC 60364-4-41 SELV/PELV.
  - The shielding effect of cables must also be guaranteed after installation (bending radii!) and after connector changes. In cases of doubt, use more flexible and more reliable cables.
  - A 5-wire cable with a PE-conductor isolated from the N-conductor (so-called TN network) is recommended for the drive/motor cabling. This will largely prevent equipotential bonding currents and the development of interference.
  - A shielded and stranded data cable must be used to ensure high electromagnetic interference stability of the system. The shielding should be connected with low resistance to protective ground using large shield clips **at both ends**. The shielding should be grounded **in the switch cabinet only** if the machine ground is heavily contaminated with interference towards the switch cabinet ground.
  - Equipotential bonding measures must be provided for the complete processing chain of the system. Compensating currents due to potential differences across the shield to the measuring system must be avoided in particular.
  - Power and signal cables must be laid separately. During installation observe the national safety and installation guidelines for data and energy cables.
  - Observe the manufacturer's instructions for the installation of converters and for shielding power cables between frequency converter and motor.
  - Ensure adequate dimensioning of the energy supply.
  - Separation or delimitation of the measuring system from potential jammers.
  - Provide the use of filters.
  - Observe requirements for external and internal lightning protection.
  - To ensure safe and fault-free operation, the pertinent standards and directives must be observed. In particular, the applicable EMC directive and the shielding and grounding directives must be observed!
  - Upon completion of installation, a visual inspection with report should be carried out.

© TR Electronic GmbH 2016, All Rights Reserved

6.2 EMC conform wiring schemes

6.2.1 Connection scheme 1

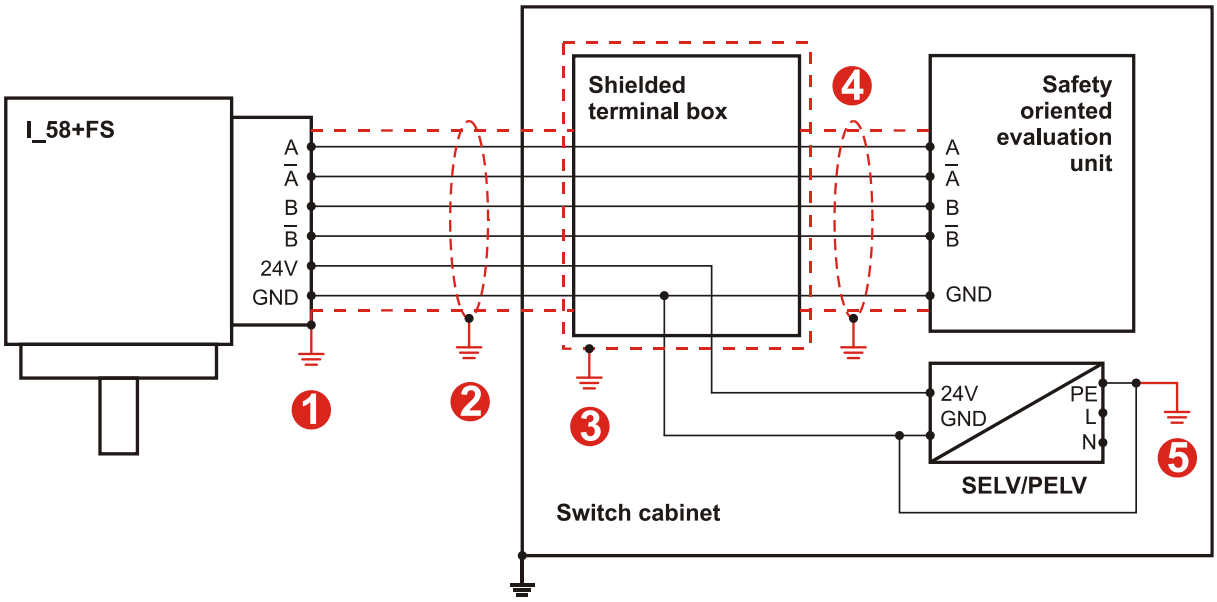

- 1x Ground connection (connection possibilities ❶, ❷, ❸, ❹ or ❺)
- Avoid ground loops
- Connect all shields double-sided
- Shielding must not be interrupted
- Twisted pair wires (A,/A), (B,/B)

6.2.2 Connection scheme 2

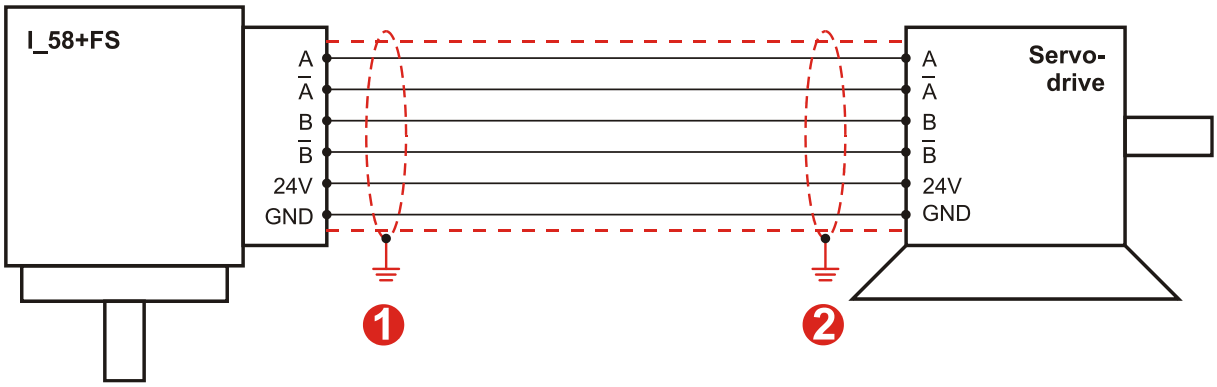

- 1x Ground connection (connection possibilities ❶ or ❷)
- Avoid ground loops
- Connect all shields double-sided
- Shielding must not be interrupted
- Twisted pair wires (A,/A), (B,/B)

© TR Electronic GmbH 2016, All Rights Reserved

6.2.3 Connection scheme 3

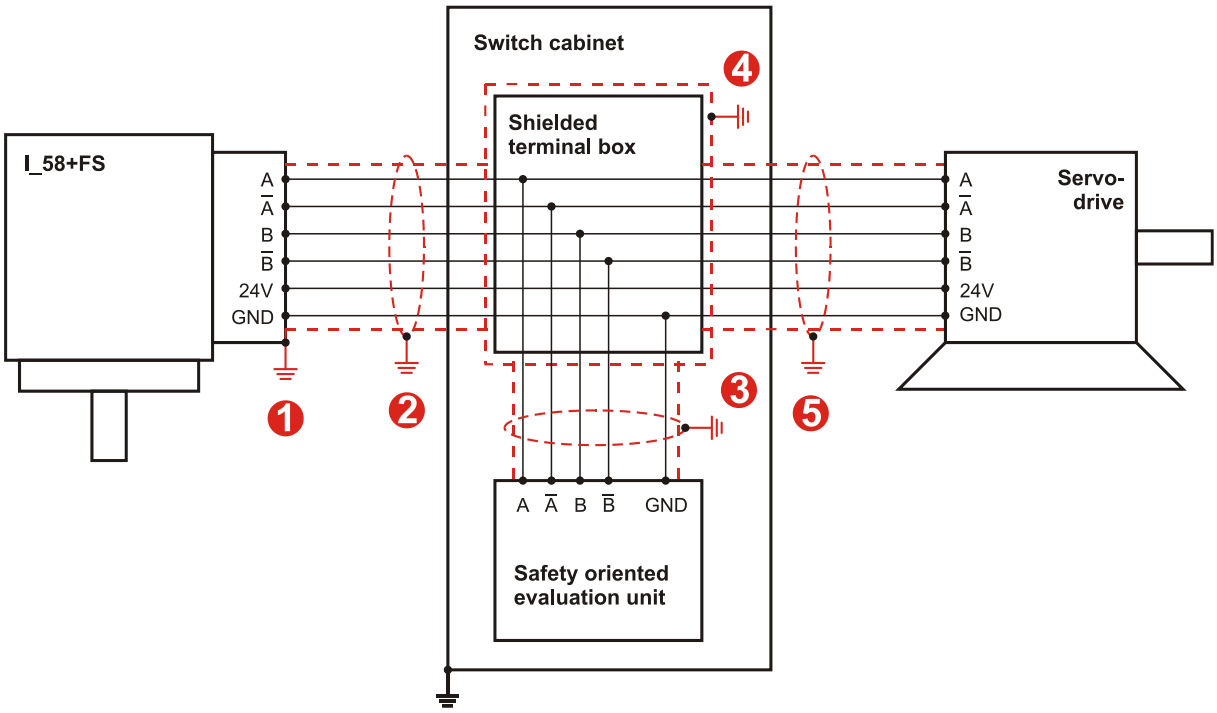

- 1x Ground connection (connection possibilities ❶, ❷, ❸, ❹ or ❺)
- Avoid ground loops
- Connect all shields double-sided
- Shielding must not be interrupted
- Twisted pair wires (A,/A), (B,/B)

© TR Electronic GmbH 2016, All Rights Reserved

6.3 Ground connection – measuring system

In principle, it is recommended that the ground connection of the measuring system has a good conductive connection to the functional earth of the machine.
This particularly applies to measuring systems with hollow or blind shaft at which the functional earth of the machine to the measuring system should be connected e.g. by cable eyes and a cable with min. 4 mm² (not contained in the extent of supply). For this purpose, corresponding thread drillings are available in the measuring system flange.

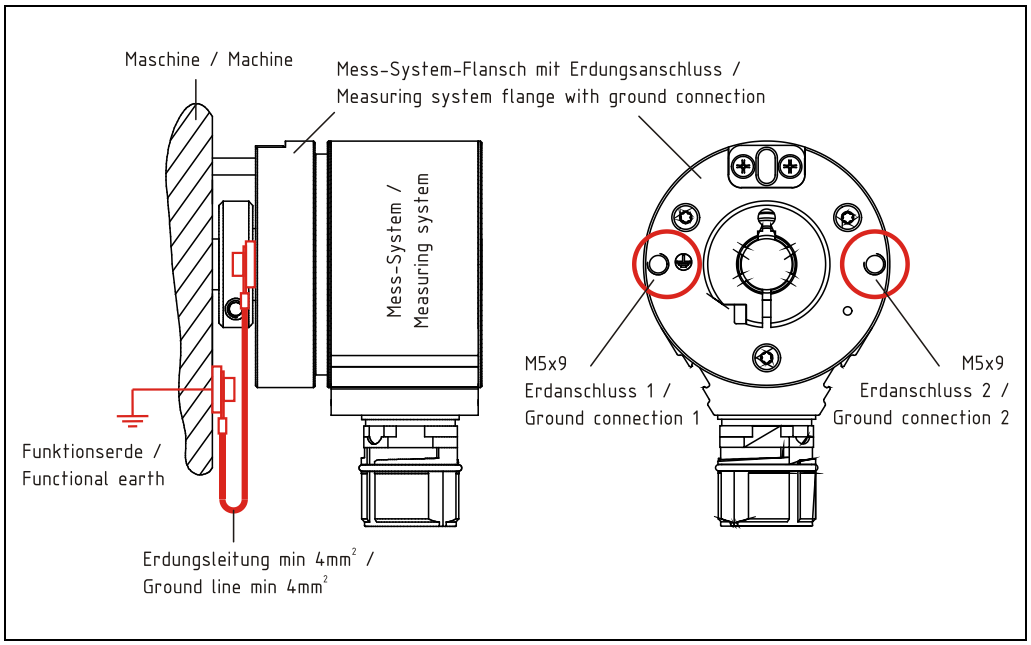

Figure 15: Ground connection – measuring system

-Protective housing:
Potential equalization cable - connection, see -User manual

© TR Electronic GmbH 2016, All Rights Reserved

6.4 Cable specification

Variant 1, analog incremental signals (SIN/COS)

Signal	Description
Supply	Min. 0.34 mm² and shielded, 0.5 mm² recommended. Generally the cable cross-section must be matched to the cable length.
SIN+ / SIN–	Min. 0.14 mm² and shielded, 0.25 mm² recommended. However, to ensure the signal quality and to minimize possible environmental influences, we recommend twisting each signal pair (±).
COS+ / COS–	
[4] Ref+ / Ref–	

Variant 2, square-wave incremental signals (TTL/HTL)

Signal	Description
Supply	Min. 0.34 mm² and shielded, 0.5 mm² recommended. Generally the cable cross-section must be matched to the cable length.
K1+ / K1–	Min. 0.14 mm² and shielded, 0.25 mm² recommended. However, to ensure the signal quality and to minimize possible environmental influences, we recommend twisting each signal pair (±).
K2+ / K2–	
[4] K0+ / K0–	



Ex-Protective housing:

The connection cable is an integral part of the explosion protection housing and cannot be freely selected. On the basis of the given cable parameters it must be checked, whether they meet the specific application requirements, see Ex-User manual.

[4] optional, the reference signal is not evaluated from a safety viewpoint

© TR Electronic GmbH 2016, All Rights Reserved

6.5 Permitted cable length

The permissible cable length at the transmission of incremental signals depends on the output frequency, the applied supply voltage and the ambient temperature of the measuring system, see the following diagrams.

The TR-own hybrid cable (Art.-No.: 64-200-021) was used for the measurements.



Ex-Protective housing:

The error-free function of the incremental interface must be ensured with the cable used with the explosion protection housing and the application-dependent parameters must be checked before productive operation.

6.5.1 Analog incremental signals (SIN/COS)

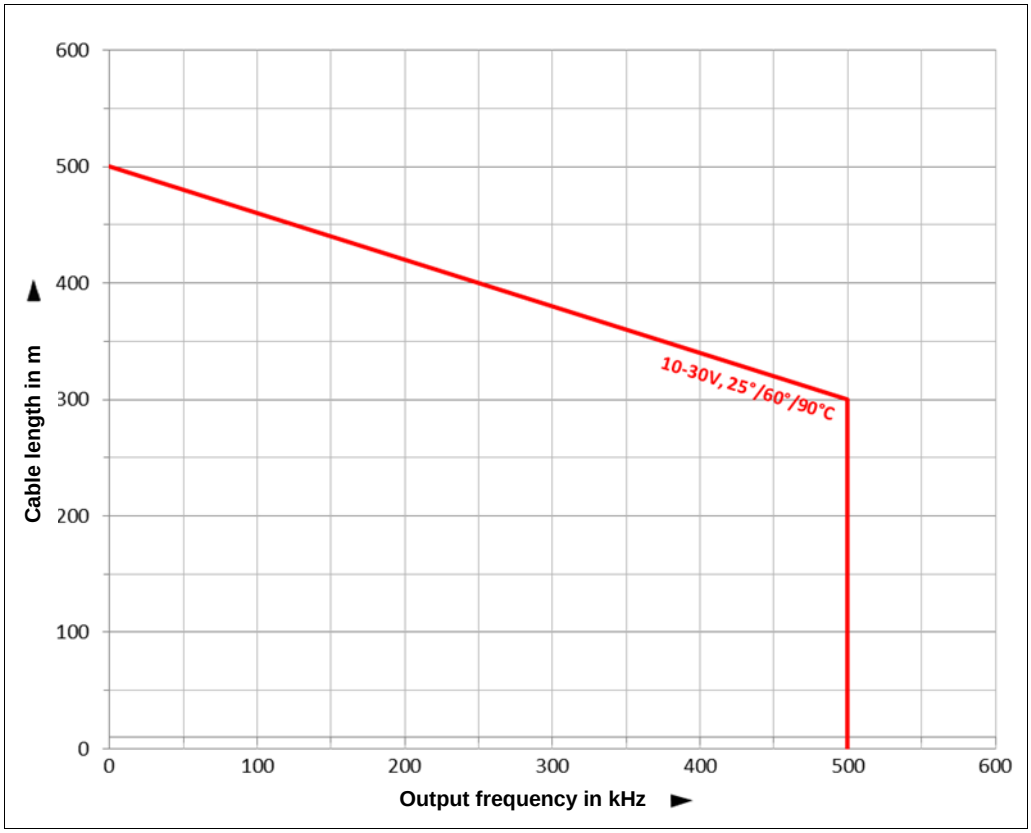

Figure 16: Maximum permissible cable length for SIN/COS interface

© TR Electronic GmbH 2016, All Rights Reserved

6.5.2 Square-wave incremental signals (TTL/HTL)

TTL interface:

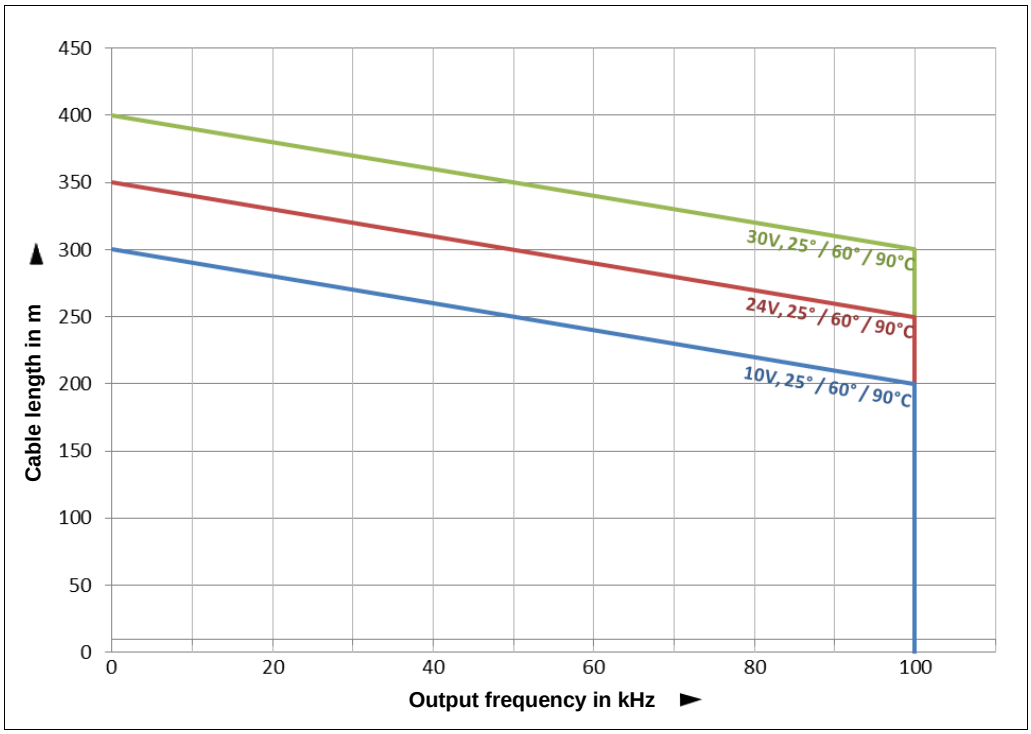

Figure 17: Maximum permissible cable length for TTL interface

HTL interface:

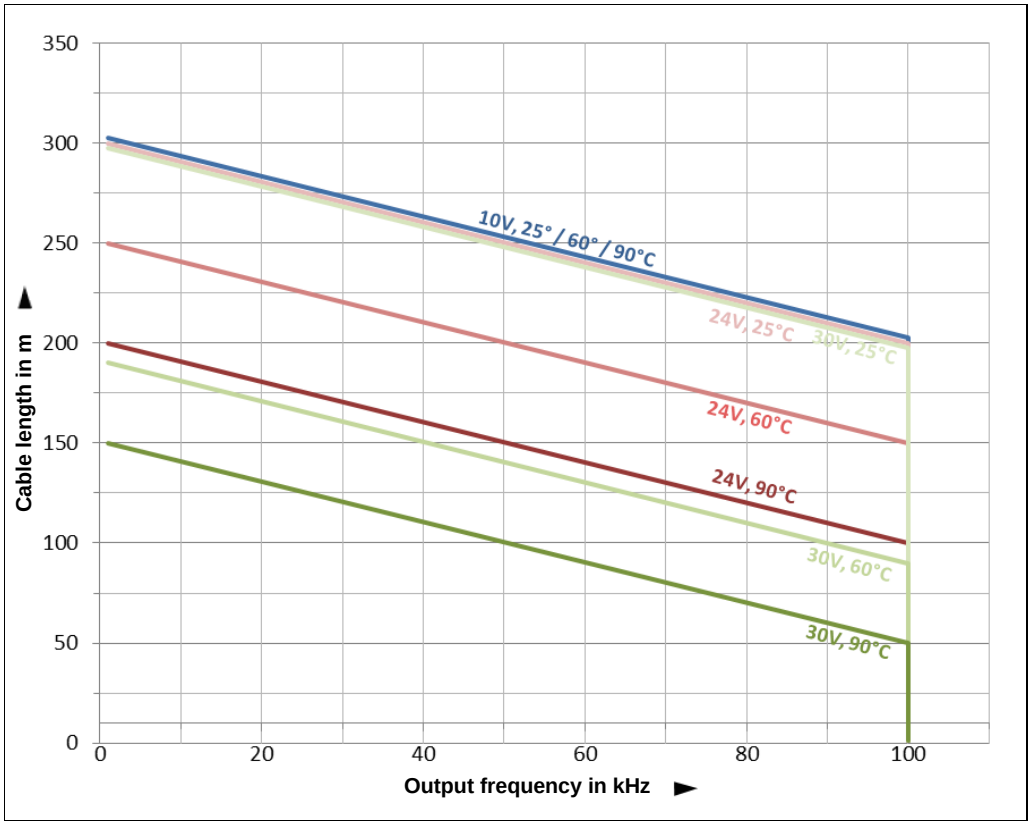

Figure 18: Maximum permissible cable length for HTL interface

© TR Electronic GmbH 2016, All Rights Reserved

6.6 Connection - Notes

Mainly, the electrical characteristics are defined by the variable connection technique.



The connection can be made only in connection with the device specific pin assignment!
At the delivery of the measuring system one device specific pin assignment in printed form is enclosed and it can be downloaded afterwards. Pin assignment download, see chapter 13.4.

6.6.1 Order number for the connectors

6.6.1.1 Suitably for the A coded male socket M12 - 8 pin.

Manufacturer	Name	Art no.
Binder (HTN: 99 1486 812 08)	Female socket – straight	62 000 1473
Murr	M12 Female socket, straight, shielded, with free cable end	7000-17121-286XXXX (e.g. 7000-17121-2860500 – 5 m) (e.g. 7000-17121-2862500 – 25 m)
Murr	M12 Female socket, 90° angled, shielded, with free cable end	7000-17141-2860150 (several cable lengths on request)

6.6.1.2 Suitably for the male socket M23 - 12 pin.

Manufacturer	Name	Art no.
Intercontec	Female socket, mating connector	62 000 249
TR - Electronic GmbH	System cable	90-397-XXX.X (e.g. 90-397-010.0 – 10 m)

© TR Electronic GmbH 2016, All Rights Reserved

7 Incremental interface

NOTICE

Danger of damage to subsequent electronics due to overvoltages caused by a missing ground reference point!

- If the ground reference point is completely missing, e.g. 0 V of the power supply not connected, voltages equal to the supply voltage can occur at the outputs of this interface.
  - ➢ It must be ensured that a ground reference point is present at all times,
  - ➢ or the system operator must provide appropriate protective mechanisms for the subsequent electronics.
- If the input voltage exceeds 30 V, these voltages occur accordingly at the HTL outputs. This can lead to damage of the output or input circuit of the downstream processing unit.

NOTICE

Danger of unnoticed damage to the internal electronics, due to unacceptable overvoltages!

- If overvoltages of >7 V DC are inadvertently applied at the incremental analog output signals SIN+, SIN–, COS+, COS–, Ref+ or Ref–, the measuring system must be checked in the factory.
  - ➢ The measuring system must be shut down immediately
  - ➢ When sending the measuring system to the factory, the reasons and circumstances relating to the overvoltage must be specified

The measuring system acquires the angular information from the connected process via the rotation of the shaft. A pulse disk is fixed to the shaft; this acquires the angular increments with a defined number of periods per revolution. A scanning unit with integrated optoelectronics generates electrical signals and outputs signal periods, which can be processed in a signal conditioner afterwards.

The resolution of the measuring system is defined by the number of light/dark segments (pulse number per revolution) on the pulse disk. A signal sequence of e.g. 1024 periods is output during one revolution. To evaluate the counting direction, a 2nd signal sequence with a 90° phase offset is output for the control.

The counter of an external control can be reset with an additional zero pulse, and the mechanics - control reference point can thus be defined.

© TR Electronic GmbH 2016, All Rights Reserved

7.1 Variant 1, analog incremental signals (SIN/COS)

The number of periods / revolution is dependent on the device variant. Resolutions of 1024, 2048 and 4096 periods / revolution are supported.

Measuring the signals against 0 V gives the following signal curve:

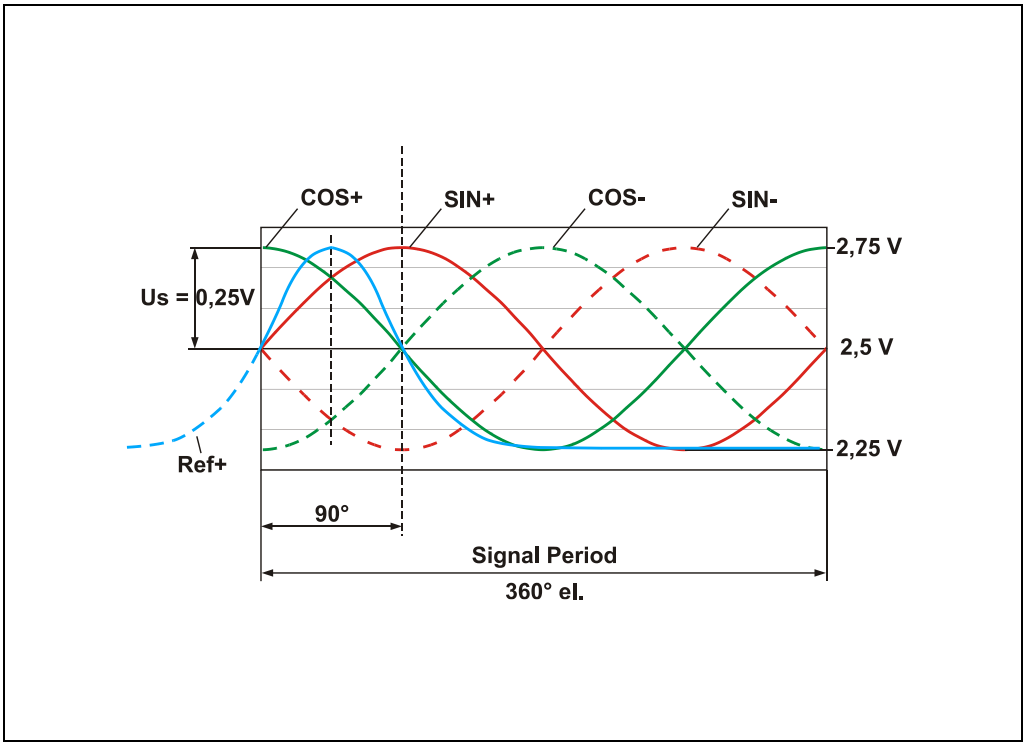

Figure 19: Signal curve with clockwise direction of rotation looking at the flange connection

Differential measurement of the signals gives the following signal curve:

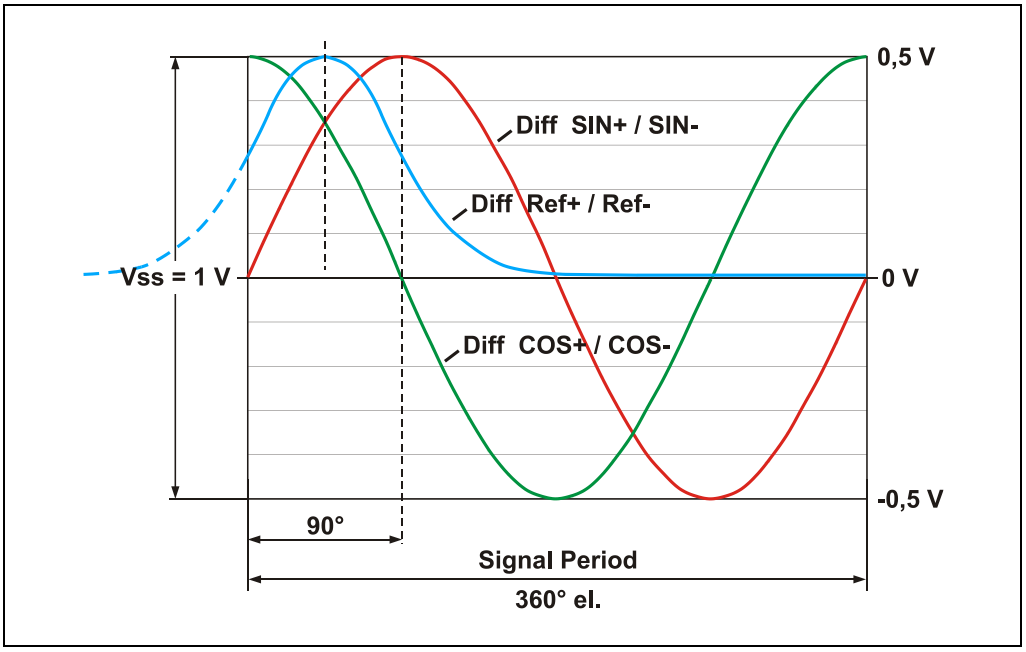

Figure 20: Signal curve with clockwise direction of rotation looking at the flange connection

© TR Electronic GmbH 2016, All Rights Reserved

7.2 Variant 2, square-wave incremental signals (TTL/HTL)

The number of pulses / revolution is dependent on the device variant. Resolutions of 1024, 2048 and 4096 pulses / revolution are supported.

The output levels are also specified by the factory setting; TTL output stages and HTL output stages are supported.

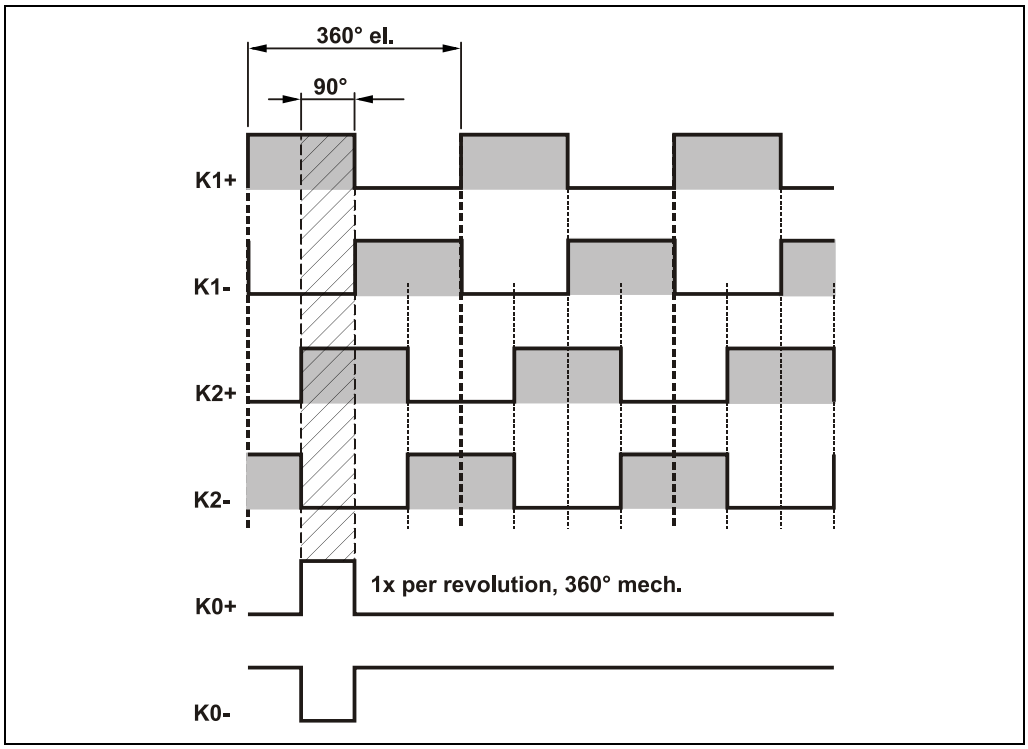

Figure 21: Signal curve with clockwise direction of rotation looking at the flange connection

© TR Electronic GmbH 2016, All Rights Reserved

8 Maintenance

The measuring system requires no maintenance by the operator.

However, if the bearing life of the product is exceeded within a service life of 20 years, the metering system must be taken out of service and sent to the manufacturer.

After 20 years of use, the measuring system must be subjected to a proof test.

For more information, please refer to these standards

- DIN EN 62061 and
- DIN EN 61508

titled “Safety of Machinery – Functional safety of electrical/electronic/programmable electronic safety-related systems”.

The procedure must be coordinated with the manufacturer.

© TR Electronic GmbH 2016, All Rights Reserved

9 Decommissioning / demounting

When decommissioning or demounting, the following instructions from the chapter "Safety-related instructions" must be observed in particular:

- Wiring work may only be carried out and electrical connections only be opened and closed while the system is de-energized.
- Avoid shocks (e.g., hammer blows) to the shaft during installation / demounting.

Connector plugs of the measuring system that are unused during storage, operation and/or demounting of the system have to be provided either with a mating connector or a protective cap. The IP degree of protection is to be selected according to requirements.

© TR Electronic GmbH 2016, All Rights Reserved

10 Replacing the Measuring System

The following points must be noted when replacing the measuring system:

- The new measuring system must have the same article number as the measuring system being replaced; any deviations must be expressly clarified with TR Electronic GmbH.
- The new measuring system must be installed in accordance with the specifications and requirements in chapter "Mounting" on page 26 .
- The new measuring system must be connected in accordance with the specifications in chapter "Connection" on page 49 .
- Depending on the application, the output incremental value may need to be adjusted to the machine reference position.
- When recommissioning the replaced measuring system, correct functioning must be ensured first of all by means of a protected test run.

© TR Electronic GmbH 2016, All Rights Reserved

11 Accessories

Optional torque holder with joint head and threaded rod M5

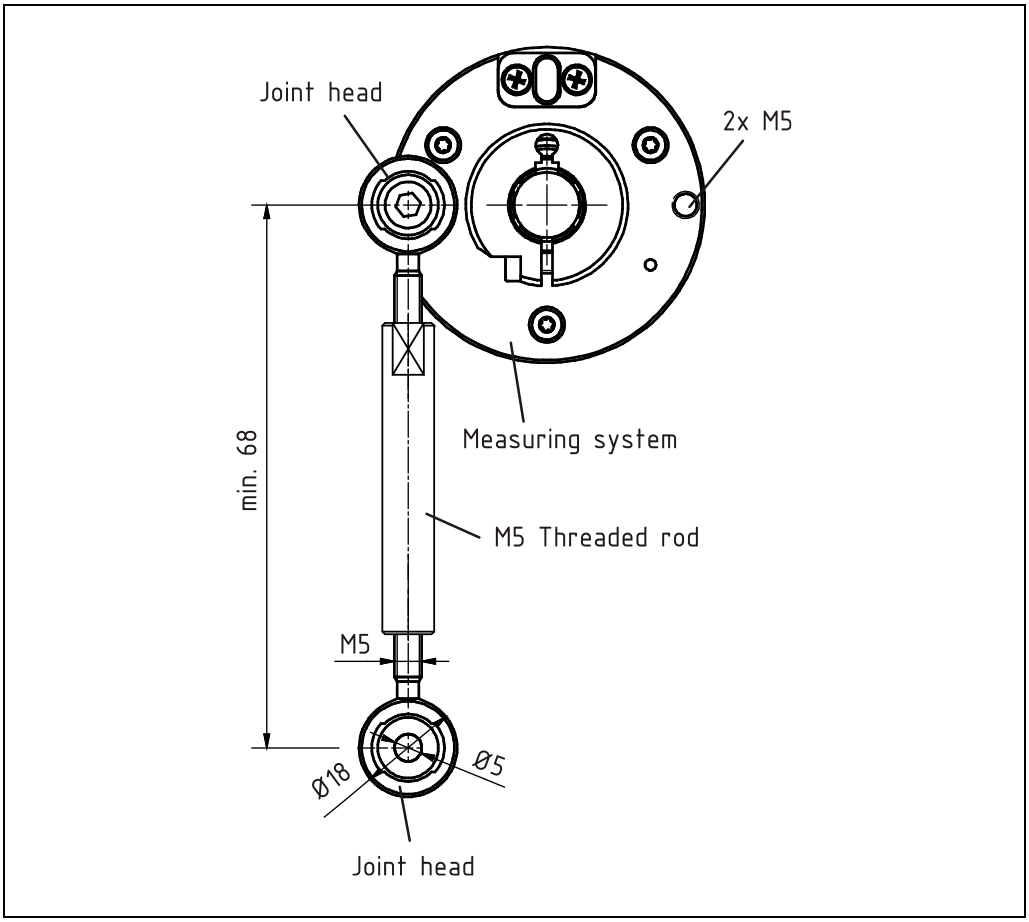

Designation	Part number
Joint head M5	49-280-002
Threaded rod M5, ∅ 10 mm x 60 mm	49-917-026
Threaded rod M5, ∅ 10 mm x 105 mm	49-995-200
Threaded rod M5, ∅ 10 mm x 360 mm	49-917-022

© TR Electronic GmbH 2016, All Rights Reserved

12 Checklist

We recommend that you work through the checklist during commissioning and when replacing the measuring system and store it as part of the overall system documentation.

Documentation basis	Date	Edited	Checked

Sub-item	To note	Can be found under	yes
Present user manual has been read and understood	–	Document no.: TR-ECE-BA-GB-0120	☐
Check that the measuring system can be used for the present automation task on the basis of the specified safety requirements	• Intended use • Safety functions of the fail-safe processing unit • Compliance with all technical data	• Chapter Intended use, page 14 • Chapter Safety functions of the fail-safe processing unit, page 17 • Chapter Technical data, page 22	☐
Fulfillment of the installation requirements	• Recommendation: Connection of the measuring system - shaft to the drive should be designed as form closure • The coupling to the drive must be over-dimensioned in accordance with **DIN EN 61800-5-2:2014-06 - Draft**	• Chapter Mounting, from page 26	☐
Voltage supply requirement	• The power supply used must meet the requirements of SELV/PELV (IEC 60364-4-41:2005)	• Chapter Electrical characteristics, page 23 • Chapter EMC requirements, page 42	☐
Correct electrical installation (shielding)	• Observance of basic rules for installation • Observance of wiring standards	• Chapter Installation / Preparation for Commissioning, Page 42	☐
System test after commissioning and modifications	• During commissioning and after any modifications all affected safety functions must be checked	• Chapter Safety functions of the fail-safe processing unit, page 17	☐
Device replacement	• It must be ensured that the new device corresponds to the replaced device • All affected safety functions must be checked	• Chapter Replacing the Measuring System, page 55 • Chapter Safety functions of the fail-safe processing unit, page 17	☐

© TR Electronic GmbH 2016, All Rights Reserved

13 Appendix

13.1 TÜV certificate

Download
- www.tr-electronic.com/f/TR-ECE-TI-DGB-0300

13.2 Revision list

Download
- www.tr-electronic.com/f/TR-ECE-TI-DGB-0389

13.3 EU Declaration of Conformity

Download
- www.tr-electronic.com/f/TR-ECE-KE-DGB-0340

13.4 Pin assignment

Download
- www.tr-electronic.com/service/downloads/pin-assignments.html
  The number of the pin assignment is noted on the nameplate of the measuring system.

13.5 Drawings

See drawing, related to the order number

© TR Electronic GmbH 2016, All Rights Reserved