ETHERNET POWERLINK certified product

open SAFETY certified product

Original

Absolute Encoder CD_582-EPL POWERLINK/openSAFETY

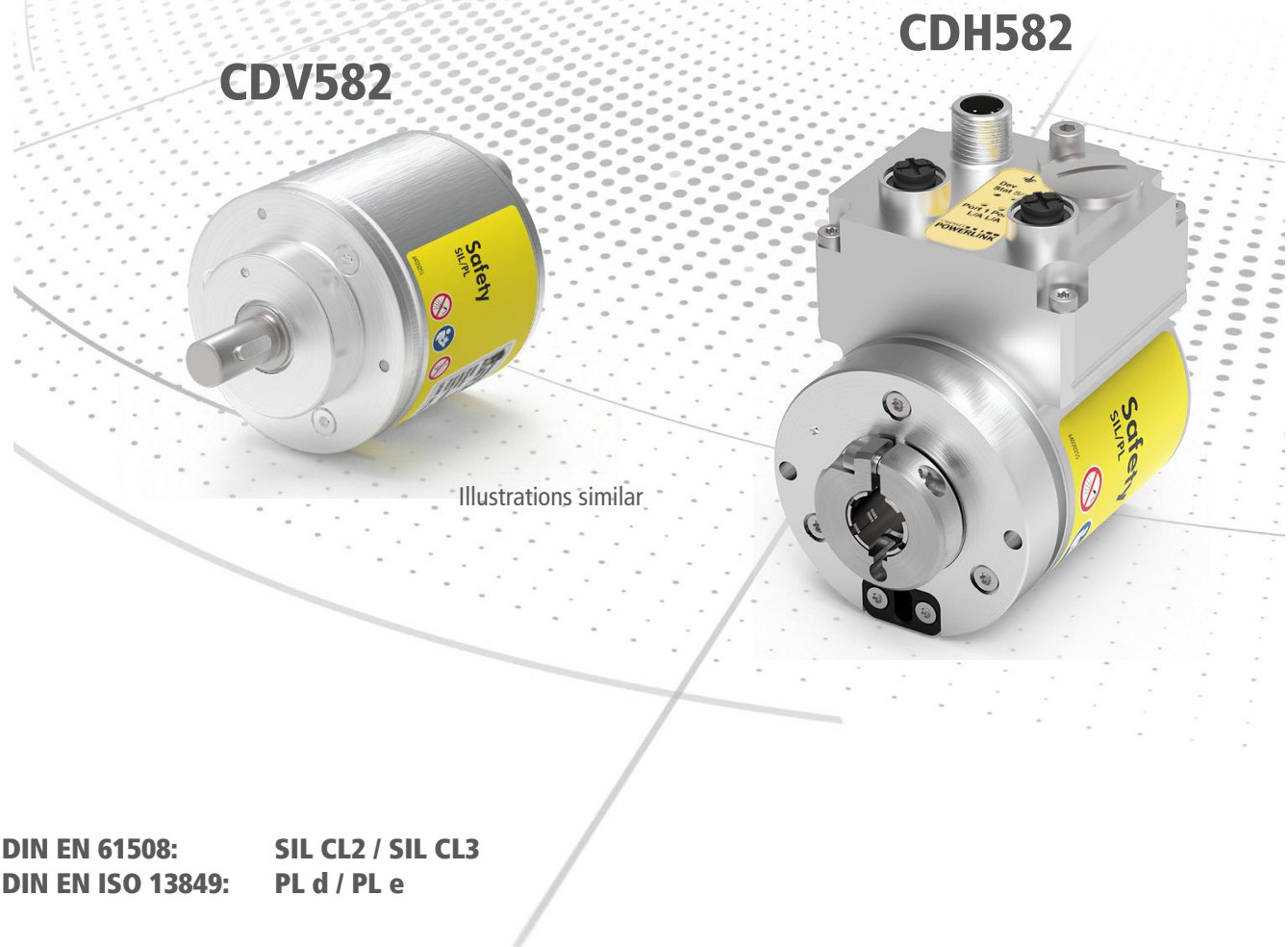

DIN EN 61508: **SIL CL2 / SIL CL3**
DIN EN ISO 13849: **PL d / PL e**

_Safety information
_Device-specific characteristics
_Installation/Commissioning
_Parameterization
_Error causes and solutions

Interface User Manual

TR-ECE-BA-GB-0169 v03 / 11/13/2026

TR Electronic GmbH
D-78647 Trossingen
Eglishalde 6
Tel.: (0049) 07425/228-0
Fax: (0049) 07425/228-33
Email: info@tr-electronic.de
www.tr-electronic.de

Copyright protection

This Manual, including the illustrations contained therein, is subject to copyright protection. Use of this Manual by third parties in contravention of copyright regulations is not permitted. Reproduction, translation as well as electronic and photographic archiving and modification require the written consent of the manufacturer. Violations shall be subject to claims for damages.

Subject to amendments

The right to make any changes in the interest of technical progress is reserved.

Document information

Release date / Rev. date:	11/13/2026
Document / Rev. no.:	TR-ECE-BA-GB-0169 v03
File Name:	TR-ECE-BA-GB-0169 v03.doc
Author:	FRJ, DIR

Font styles

Italic or bold font styles are used for the title of a document or are used for highlighting.

`Courier`-font displays text, which is visible on the screen and software/software menu selections.

″ < > ″ indicates keys on your computer keyboard (such as <RETURN>).

Brand names

Specified products, names and logos serve exclusively for information purposes and may be trademarks of their respective owners, without any special marking to indicate this.

© TR Electronic GmbH 2023, All Rights Reserved

Contents

Contents **3**
Revision index **6**
1 General information **7**
1.1 Applicability 7
1.2 References 8
1.3 Abbreviations and terms used 9
1.4 Main features 11
1.5 Principle of the safety function 12
2 Safety information **13**
2.1 Definition of symbols and notes 13
2.2 Safety functions of the fail-safe processing unit 14
2.2.1 Mandatory safety checks / measures 14
3 Installation / Preparation for Commissioning **15**
3.1 Basic rules 15
3.2 POWERLINK transfer technology, cable specification 16
3.3 Connection information 17
3.3.1 Supply voltage 17
3.3.2 Optional additional interfaces (Incremental, SSI) 17
3.4 EPL Node ID 18
3.4.1 Adjustment via hardware switches 18
3.5 Measuring system - POWERLINK synchronization 18
3.6 Incremental interface / SIN/COS interface (optional) 19
3.6.1 Signal characteristics 20
3.6.2 HTL / TTL levels (optional) 21
3.7 SSI interface (optional) 23
3.7.1 Signal characteristics 23
3.7.2 Cable lengths 25
4 Commissioning **26**
4.1 POWERLINK / openSAFETY 26
4.2 Device description file 27
4.3 Bus status display 28
4.3.1 Display states and flashing frequency 28
4.3.2 Link / Data Activity LEDs 28
4.3.3 POWERLINK Status LED 29
4.3.4 openSAFETY Status LED 29
4.4 IP addressing 30
4.5 Commissioning via B&R X20 CPU 30
5 Structure of Process Data **31**
5.1 Legacy profile 31
5.1.1 Safety-related process data 31
5.1.1.1 Input data 32
5.1.1.1.1 TR-Status 32
5.1.1.1.2 Speed 33
5.1.1.1.3 Multi turn / Single turn 33

© TR Electronic GmbH 2023, All Rights Reserved

Contents

5.1.1.1.4 Actual value scale 34
5.1.1.2 Output data 35
5.1.1.2.1 TR-Control 35
5.1.1.2.2 Preset multi turn / Preset single turn 35
5.1.2 NON-safety-related process data 36
5.1.2.1 Input data 36
5.1.2.1.1 Cams 36
5.1.2.1.2 Speed 37
5.1.2.1.3 Multi turn / Single turn 37
5.1.2.1.4 Actual value scale 38
5.1.3 Preset adjustment function 39
5.1.3.1 Timing diagram 40
5.2 TR profile 41
5.2.1 Safety-related process data 41
5.2.1.1 Input data 42
5.2.1.1.1 TR-Status 1 42
5.2.1.1.2 TR-Status 2 43
5.2.1.1.3 Safe position value 43
5.2.1.1.4 Speed 43
5.2.1.2 Output data 44
5.2.1.2.1 TR-Control 44
5.2.1.2.2 Preset set value 44
5.2.1.3 Preset adjustment function 45
5.2.1.3.1 Timing diagram 46
5.2.2 NON-safety-related process data 47
5.2.2.1 Input data 47
5.2.2.1.1 TR-Status 47
5.2.2.1.2 Position 48
5.2.2.1.3 Speed 48
5.2.2.2 Output data 48
5.2.2.2.1 TR-Control 48
5.2.2.2.2 Preset set value 48
5.2.2.3 Preset adjustment function 49
6 POWERLINK – Object Directory 50
6.1 Communication-specific standard objects, DS-301 50
6.2 Relevant manufacturer-specific objects 51
6.2.1 Object 2000h: Device configuration 51
6.2.2 Object 2012h: NON-safety-related data – Legacy / TR profile 51
6.2.3 Object 2020h: Status information - head-end 51
6.2.4 Object 4002h: Indata_safe – Legacy / TR profile 52
6.2.5 Object 4003h: Outdata_safe – Legacy / TR profile 52
6.3 Access to the POWERLINK object directory 53
6.3.1 TR-Legacy 53
6.3.2 TR profile 54
7 openSAFETY – Object Directory 55
7.1 Access to openSAFETY – I/O data 55
7.1.1 TR-Legacy 55
7.1.2 TR profile 56
8 Parameterization - Modular Measuring System 57
8.1 Head-end 57
8.2 “Legacy” child element 58
8.2.1 Safety-related parameters 58
8.2.1.1 Rotational direction 58
8.2.1.2 Safe integration time 58

© TR Electronic GmbH 2023, All Rights Reserved

8.2.1.3 Window increments 59
8.2.1.4 Preset standstill tolerance 59
8.2.2 NON-safety-related parameters 59
8.2.2.1 Unsafe integration time 59
8.3 “TR Profile” child element 60
8.3.1 Safety-related parameters 60
8.3.1.1 Rotational direction 61
8.3.1.2 Scaling parameters 62
8.3.1.3 Speed format 65
8.3.1.4 Speed factor 65
8.3.1.5 Speed integration time 66
8.3.1.6 Speed filter type 66
8.3.1.7 Speed filter strength 67
8.3.1.8 Window increments 67
8.3.2 NON-safety-related parameters 68
8.3.2.1 Rotational direction 69
8.3.2.2 Scaling parameters 69
8.3.2.3 Speed format 72
8.3.2.4 Speed factor 72
8.3.2.5 Speed integration time 73
8.3.2.6 Speed filter strength 73
8.3.2.7 Speed filter type 74
8.3.2.8 Remote default value 74
8.3.2.9 Linked to safe sensor 74
8.4 OPTION: “SSI” and “Incremental” child elements 75
8.4.1 SSI (synchronous-serial) parameters 76
8.4.1.1 SSI channel 77
8.4.1.2 SSI coding 77
8.4.1.3 SSI number of bits 77
8.4.1.4 SSI mono time 77
8.4.1.5 SSI status bits 77
8.4.1.6 SSI sign-of-life counter 78
8.4.1.7 SSI checksum 78
8.4.2 Incremental parameters 79
8.4.2.1 Number of incr. pulses 79
9 Output of Forced Variable Values (Substitute Values) 80
10 Troubleshooting and Diagnosis Options 81
10.1 Optical displays 81
10.1.1 Link status, PORT1: LED1; PORT2: LED2 81
10.1.2 POWERLINK status, LED3 81
10.1.3 openSAFETY Status, LED4 82
10.2 Manufacturer-specific diagnosis (POWERLINK object) 83
10.3 Reading security logs 84
10.3.1 “Firmware update” event 84
10.3.2 “Change IP address” event 84
11 Checklist, Part 2 of 2 85
12 Appendix 86
12.1 POWERLINK certificate 86
12.2 EU Declarations of Conformity 86

© TR Electronic GmbH 2023, All Rights Reserved

Revision index

Modification	Date	Index
First issue	06/19/23	01
- Chapter 4.1 POWERLINK / openSAFETY: Text modified - Discontinuation of the EPSG in April 2023: Responsibility now assumed by B&R	04/14/26	02
Reading security logs in accordance with cybersecurity requirements. Chapter 10.3 on page 84	11/13/26	03

© TR Electronic GmbH 2023, All Rights Reserved

1 General information

This interface-specific user manual contains the following topics:

- Safety information
- Device-specific characteristics
- Installation/Commissioning
- Parameterization
- Error causes and solutions

As the documentation is arranged in a modular structure, this User Manual is supplementary to other documentation, such as product data sheets, dimensional drawings, brochures and safety manual etc..

The User Manual may be included in the customer's specific delivery package or it may be requested separately.

1.1 Applicability

This User Manual applies exclusively for measuring system series in accordance with the following type code with ***POWERLINK*** interface and ***openSAFETY*** protocol:

* 1	* 2	* 3	* 4	* 5	-	* 6	* 6	* 6	* 6	* 6

Position	Designation	Description
* 1	A C	Explosion-proof enclosure (ATEX); Absolute encoder, programmable
* 2	D	Redundant dual scanning
* 3	V H S W	Solid shaft Hollow shaft Blind shaft Draw-wire box
* 4	582	Outer diameter ∅ 58 mm, 2nd generation
* 5	M S	Multiturn Singleturn
* 6	-	Consecutive number

* = placeholder

The products are labeled with affixed nameplates and are components of a system.

The following documentation therefore also applies:

- See the chapter "Other applicable documents" in the Safety Manual http://www.tr-electronic.de/f/TR-ECE-BA-GB-0142
- Product data sheets https://www.tr-electronic.com/s/S025323

© TR Electronic GmbH 2023, All Rights Reserved

1.2 References

1.	DS-301	Ethernet POWERLINK Communication Profile V1.4.0
2.	WDP-304	openSAFETY Profile Specification V1.5.2
3.	CiA DS-406	CANopen Profile for Encoders
4.	IEC 61158-300	Digital data communications for measurement and control - Fieldbus for use in industrial control systems - Part 300: Data Link Layer service definition
5.	IEC 61158-400	Digital data communications for measurement and control - Fieldbus for use in industrial control systems - Part 400: Data Link Layer protocol specification
6.	IEC 61158-500	Digital data communications for measurement and control - Fieldbus for use in industrial control systems - Part 500: Application Layer service definition
7.	IEC 61158-600	Digital data communications for measurement and control - Fieldbus for use in industrial control systems - Part 600: Application Layer protocol specification
8.	IEC 61784-2	Digital data communications for measurement and control - Additional profiles for ISO/IEC 8802-3 based communication networks in real-time applications
9.	ISO/IEC 8802-3	Carrier Sense Multiple Access with Collision Detection (CSMA/CD) Access Method and Physical Layer Specifications
10.	IAONA Directive	“Industrial Ethernet - Planning and Installation Guide”
11.	ISO/IEC 11801, EN 50173	Information technology - Application-neutral communication cable systems

© TR Electronic GmbH 2023, All Rights Reserved

1.3 Abbreviations and terms used

0x	Hexadecimal representation
Automation Studio	B&R programming tool
CAT	Category: Classification of cables which are also used for Ethernet.
CD_	Absolute encoder with redundant dual scanning, all variants
CiA	CAN in Automation. Internationale Anwender- und Herstellervereinigung e.V.: not-for-profit organization for the Controller Area Network (CAN).
CN	***C***ontrolled ***N***ode: Node in the EPL network, without the capability to control the "Slot Communication Network Management" (Slave).
CRC	***C***yclic ***R***edundancy ***C***heck
DC_{avg}	***D***iagnostic ***C***overage Average diagnostic coverage
EU	***E***uropean ***U***nion
EMC	***E***lectro-***M***agnetic ***C***ompatibility
EPL	***E***thernet ***P***ower***L***ink
Forced values	In the case of a safety-related periphery with outputs, the safety-related system transmits default values (e.g. 0) to the fail-safe outputs in the case of error instead of the output values provided in the process image by the safety program.
Hub	A hub connects different network segments together, e.g. in an Ethernet network.
IAONA	***I***ndustrial ***A***utomation ***O***pen ***N***etworking ***A***lliance
IEC	International Electrotechnical Commission
IP	***I***nternet ***P***rotocol
ISO	***I***nternational ***S***tandard ***O***rganization
MAC	***M***edia ***A***ccess Control, ***E***thernet-ID
MNnmt	***M***anaging ***N***ode: Node in the EPL network, with the capability to control the "Slot Communication Network Management" (Master).
$MTTF_d$	***M***ean ***T***ime ***T***o ***F***ailure (dangerous) Mean time until dangerous failure
NMT	Network Management. One of the service elements in the application layer in the CAN reference model. Executes initialization, configuration and troubleshooting in bus traffic.
PDO	Process Data Object. Object for data exchange between several devices.
PFD_{av}	***Av***erage ***P***robability of ***F***ailure on ***D***emand Average probability of failure of a safety function with low demand
PFH	***P***robability of ***F***ailure per ***H***our Operating mode with high requirement rate or continuous demand. Probability of dangerous failure per hour.

© TR Electronic GmbH 2023, All Rights Reserved

Continued

S/UTP	***S***hielded/***U***nshielded ***T***wisted ***P***air
SDO	Service Data Object. Point to point communication with access to the object data list of a device.
SIL	***S***afety ***I***ntegrity ***L***evel: Four discrete levels (SIL1 to SIL4). The higher the SIL of a safety-related system, the lower the probability that the system cannot execute the required safety functions.
Slot	Time slot
Repeat test (proof test)	Repetitive test to detect hidden dangerous failures in a safety-related system.
XDD	***X***ML ***D***evice ***D***escription, NON-safety-related device description file
XOSDD	***o***pen***S***AFETY ***D***evice ***D***escription, safety-oriented device description file
XML	E***X***tensible ***M***arkup ***L***anguage

© TR Electronic GmbH 2023, All Rights Reserved

1.4 Main features

- POWERLINK - Interface with openSAFETY protocol, for transfer of a safe position and speed
- Quick process data channel via POWERLINK, NON-safety-related
- Only for variant 1:
  Additional incremental / SIN/COS or SSI interface, NON-safety-related
- Two-channel scanning system, for generation of reliable measured data through internal channel comparison
  - Variant 1:
    Channel 1, Master system:
    optical single-turn scanning via code disk with transmitted light and magnetic multi-turn scanning

    Channel 2, inspection system:
    magnetic single and multi-turn scanning
  - Variant 2:
    Channel 1, Master system:
    magnetic single and multi-turn scanning

    Channel 2, inspection system:
    magnetic single and multi-turn scanning
- A common drive shaft

The data of the more precise measuring system are made available unchecked in the NON-safety-related process data channel with normal POWERLINK protocol. As the process data do not have to be compared, these data are more up-to-date in variant 1 than the safety-related process data.

The inspection system serves for the internal safety check. The "safe data" obtained through two-channel data comparison are packed into the openSAFETY protocol and also transmitted to the POWERLINK control via POWERLINK. The data are also made available to the openSAFETY control through cross traffic.

The SSI interface and the incremental interface, or the optionally available SIN/COS interface, is derived from a single channel and is not evaluated from a safety viewpoint.

© TR Electronic GmbH 2023, All Rights Reserved

1.5 Principle of the safety function

System safety results when:

- Each of the two scanning channels is largely fail-safe thanks to individual diagnostic measures
- The measuring system internally compares the positions detected by both channels in two channels, also determines the speed in two channels and transfers the safe data in the openSAFETY protocol via POWERLINK to a downstream, safety-related control
- In the event of a failed channel comparison or other errors detected through internal diagnostic mechanisms, the measuring system switches the openSAFETY channel into error state
- The measuring system initialization and execution of the preset adjustment function are appropriately verified
- The control additionally checks whether the obtained position data lie in the position window expected by the control. Unexpected position data are e.g. position jumps, tracking error deviations and incorrect direction of travel
- When errors are detected the control introduces appropriate safety measures defined by the system manufacturer
- The system manufacturer ensures, through correct mounting of the measuring system, that the measuring system is always driven by the axis to be measured and is not overloaded
- The system manufacturer performs a verified test during commissioning and in the event of any parameter modification

© TR Electronic GmbH 2023, All Rights Reserved

2 Safety information

2.1 Definition of symbols and notes

⚠ DANGER	means that death or serious injury will occur if the required precautions are not met.
⚠ WARNING	means that death or serious injury can occur if the required precautions are not met.
⚠ CAUTION	means that minor injuries can occur if the required precautions are not met.
NOTICE	means that damage to property can occur if the required precautions are not met.
	indicates important information or features and application tips for the product used.

© TR Electronic GmbH 2023, All Rights Reserved

2.2 Safety functions of the fail-safe processing unit

The measuring system does not make any decisions about valid states of motion of the system in which it is used. The system must check the consistency between the position information of the measuring system and the expected movement of the system.
The **safety control**, to which the measuring system is connected, must perform the following safety checks.

To enable the correct measures to be taken in the case of error, the following applies:

If no safe position can be output due to an error detected by the measuring system, the openSAFETY channel is set to `Pre-Operational` state and automatically put into fail-safe state, openSAFETY status LED = red. In this state so-called "forced variable values" are output via the openSAFETY channel. Also see the chapter "Output of Forced Variable Values (Substitute Values)" on page 80.

Fail-safe state from the viewpoint of the measuring system:



- openSAFETY state: Pre-Operational
- openSAFETY frame: Data are set to 0
- openSAFETY module: SafeModuleOk: invalid

Upon receipt of forced data, the safety control must put the system into a safe state. It is only possible to leave this error state by eliminating the error and then switching the measuring system supply voltage off and on again! Depending on the error, it is also possible to leave the error state by acknowledging the error (Error Acknowledge) in the TR profile.

The process data channel addressable via POWERLINK is not necessarily affected by this. If the internal diagnosis of the single-channel position acquisition does not detect an error, the process data are still output. Module status: `ModuleOk=valid`. However, these data are not safe for the purposes of a safety standard.

2.2.1 Mandatory safety checks / measures

Measures for commissioning, changes	Error reaction
Application-dependent parameterization of openSAFETY parameters, see chapter "Parameterization - Modular Measuring System" on page 57.	–
In the event of parameter changes, check that the measure is executed as desired.	STOP

Check by safety control	Error reaction
Cyclical consistency check of the current safety-related openSAFETY data in relation to the previous data.	STOP
Consistency check between openSAFETY position information of the measuring system and the movement of the system.	STOP
Monitoring of cyclical openSAFETY data.	SafeModuleOk = false --> STOP
Timeout: Monitoring of the measuring system - response time. For checking e.g. cable breakage, power failure etc..	STOP

© TR Electronic GmbH 2023, All Rights Reserved

3 Installation / Preparation for Commissioning

3.1 Basic rules

⚠ WARNING ***Deactivation of the safety function through conducted interference sources!***

- All openSAFETY devices used on the bus must have a POWERLINK and an openSAFETY certificate.
- All safety-related devices must also have a certificate from a "Notified Body" (e.g. TÜV, BIA, HSE, INRS, UL, etc.).
- The 24V power supplies used must meet the requirements according to IEC 60364-4-41 SELV/PELV and conform to NEC Class 2 in UL applications.
- The shielding effect of cables must also be guaranteed after installation (bending radii/tensile strength!) and after connector changes. In cases of doubt, use more flexible cables with a higher current carrying capacity.
- For connecting the measuring system only use M12 connectors, which guarantee good contact between the cable shield and connector housing. The cable shield must be connected to the connector housing over a large area.
- Compensating currents due to potential differences across the shield to the measuring system must be avoided.
- A shielded and stranded data cable must be used to ensure high electromagnetic interference stability of the system. The shielding should be connected to protective ground **on both sides if possible**, ensuring good conductivity, using large shield clips. The shielding should be grounded in the switch cabinet **on one side**, only if the machine ground is heavily contaminated with interference towards the switch cabinet ground.
- Equipotential bonding measures must be provided for the complete processing chain of the system.
- Power and signal cables must be laid separately. During installation the national safety and installation directives for data and energy cables must be observed.
- Observe the manufacturer's instructions for the installation of converters and for shielding power cables between frequency converter and motor.
- Ensure adequate dimensioning of the energy supply.

© TR Electronic GmbH 2023, All Rights Reserved

Upon completion of installation, a visual inspection with report should be carried out. Where possible, the network quality should be determined using a suitable bus analysis tool: no duplicate IP addresses, no reflections, no frame repetitions etc.



To ensure safe and fault-free operation,

- *ISO/IEC 11801, EN 50173 (European standard)*
- *ISO/IEC 8802-3*
- *DS 301, Communication Profile Specification, chapter "Physical Layer"*
- *IAONA directive "Industrial Ethernet - Planning and Installation Guide" chapters "Cable" and "System Installation"*
  www.iaona-eu.com
- *and the standards and directives referenced therein must be observed!*

In particular the EMC directive in its valid version must be observed!

3.2 POWERLINK transfer technology, cable specification

The safety-related openSAFETY communication is embedded in the standard protocol of POWERLINK and transmitted over the same network.

For transmission according to the 100Base-TX Fast Ethernet standard, patch cables in category S/UTP Cat5e must be used (overall shielding with 2 x 2 unshielded twisted pair copper wire cables). The cables are designed for bit rates of up to 100 Mbit/s. As the measuring system supports the "Auto-Crossover function", both crossed and uncrossed cables can be used. The transmission speed is automatically detected by the measuring system and does not have to be set by means of a switch.

Half-duplex mode must be used for transmission, and automatic detection must be switched off. The use of Class 2 hubs is recommended for setting up the EPL network.

The cable length between two nodes may be max. 100 m.

© TR Electronic GmbH 2023, All Rights Reserved

3.3 Connection information

The pin assignment is dependent on the device type and is therefore noted on the type plate of each measuring system as a pin assignment number. When the measuring system is delivered, a device-specific pin assignment is provided in printed form.

Download
https://www.tr-electronic.com/service/downloads/pin-assignments

---

⚠ WARNING

NOTICE

Destruction, damage and malfunction of the measuring system due to penetration of moisture!

- When storing and operating the measuring system unused connection plugs must either be provided with a mating plug or a protective cap. The appropriate IP protection class must be selected to meet the relevant requirements.
- Closing elements with O-ring:
  When re-closing, check that the O-ring is present and correctly positioned.
- For appropriate protective caps, see the "Accessories" chapter in the Safety manual.

3.3.1 Supply voltage

NOTICE

Danger of unnoticed damage to the internal electronics, due to unacceptable overvoltages!

- The power supply used must meet the requirements of
  - SELV/PELV (IEC 60364-4-41:2005)
  - NEC Class 2 (design),
    also see chapter “UL / CSA approval” in the Safety Manual

---

Cable specification: min. 0.34 mm^2 (recommended: 0.5 mm^2). Generally, the cable cross-section must be matched to the cable length. The use of a shielded cable is recommended for applications in particularly sensitive EMC environments.

3.3.2 Optional additional interfaces (Incremental, SSI)

Cable specification: min. 0.25 mm^2 and shielded.
However, to ensure signal quality and to minimize possible environmental influences, the use of a twisted-pair cable is also recommended.

© TR Electronic GmbH 2023, All Rights Reserved

3.4 EPL Node ID

Each EPL node, MN/CN/router, is addressed by an 8-bit EPL Node-ID on the EPL layer. This ID can only be assigned once within an EPL segment and therefore only has significance for the local EPL segment. The Node-ID's 1…239 (0x01…0xEF) can be assigned for the measuring system.

3.4.1 Adjustment via hardware switches

⚠ WARNING

Destruction, damage and malfunction of the measuring system due to penetration of foreign bodies and moisture!

NOTICE

- Make sure that the closing screw is securely closed again after accessing the hardware switches to make settings.

The Node-ID is adjusted by means of two HEX rotary switches, which are only read in at the moment of switch-on. Subsequent settings during operation are therefore not recognized.

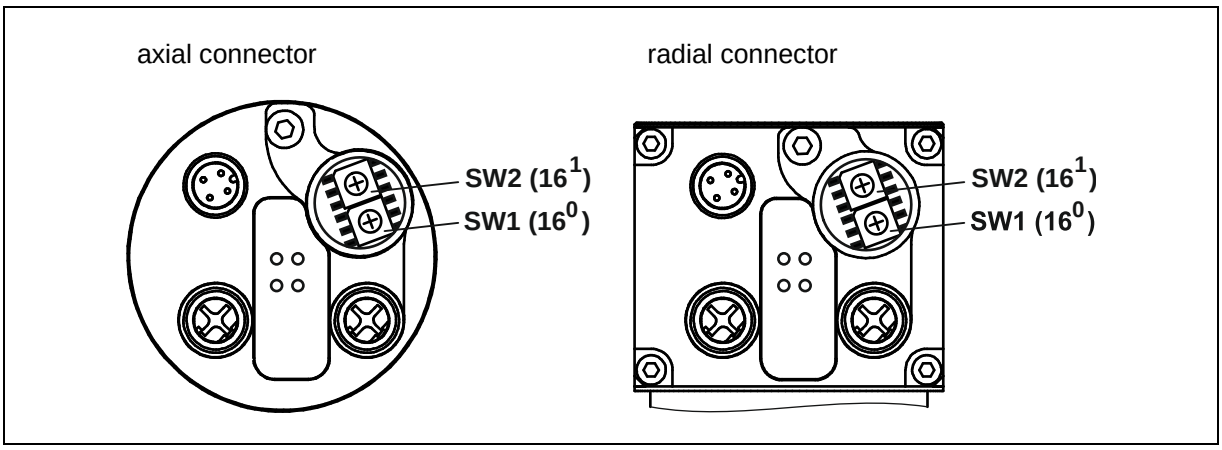

Figure 1: EPL Node-ID, switch assignment

3.5 Measuring system - POWERLINK synchronization

The measuring system synchronizes with the POWERLINK field bus, when the POWERLINK cycle time is a multiple of 500 µs.

© TR Electronic GmbH 2023, All Rights Reserved

3.6 Incremental interface / SIN/COS interface (optional)

In addition to the POWERLINK interface, the measuring system can be equipped with an additional incremental interface for output of the absolute position.
Adjustable parameters, see chapter 8.4.2 on page 79.

Alternatively, this can also be designed as a SIN/COS interface. This interface is not parameterizable.

⚠ WARNING ***This additional interface is not evaluated in relation to safety and must not be used for safety-related purposes!***

- ➢ The interface is generally used as position feedback for motor control applications.

NOTICE ***Danger of damage to subsequent electronics due to overvoltages caused by a missing ground reference point!***

- If the ground reference point is completely missing, e.g. 0V of the power supply not connected, voltages equal to the supply voltage can occur at the outputs of this interface.
  - ➢ It must be guaranteed that a ground reference point is present at all times,
  - ➢ or appropriate protective mechanisms must be provided for the subsequent electronics by the system operator.

The signal characteristics of the two possible interfaces are shown below.

© TR Electronic GmbH 2023, All Rights Reserved

3.6.1 Signal characteristics

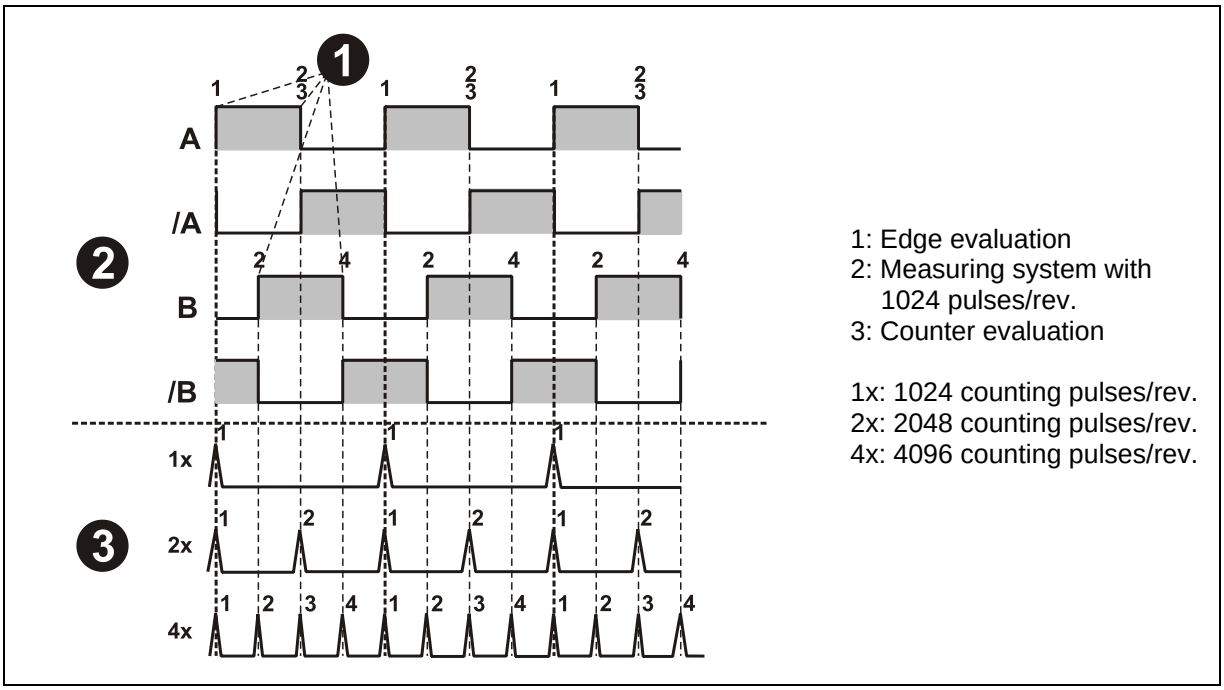

Figure2: Counter evaluation, Incremental interface

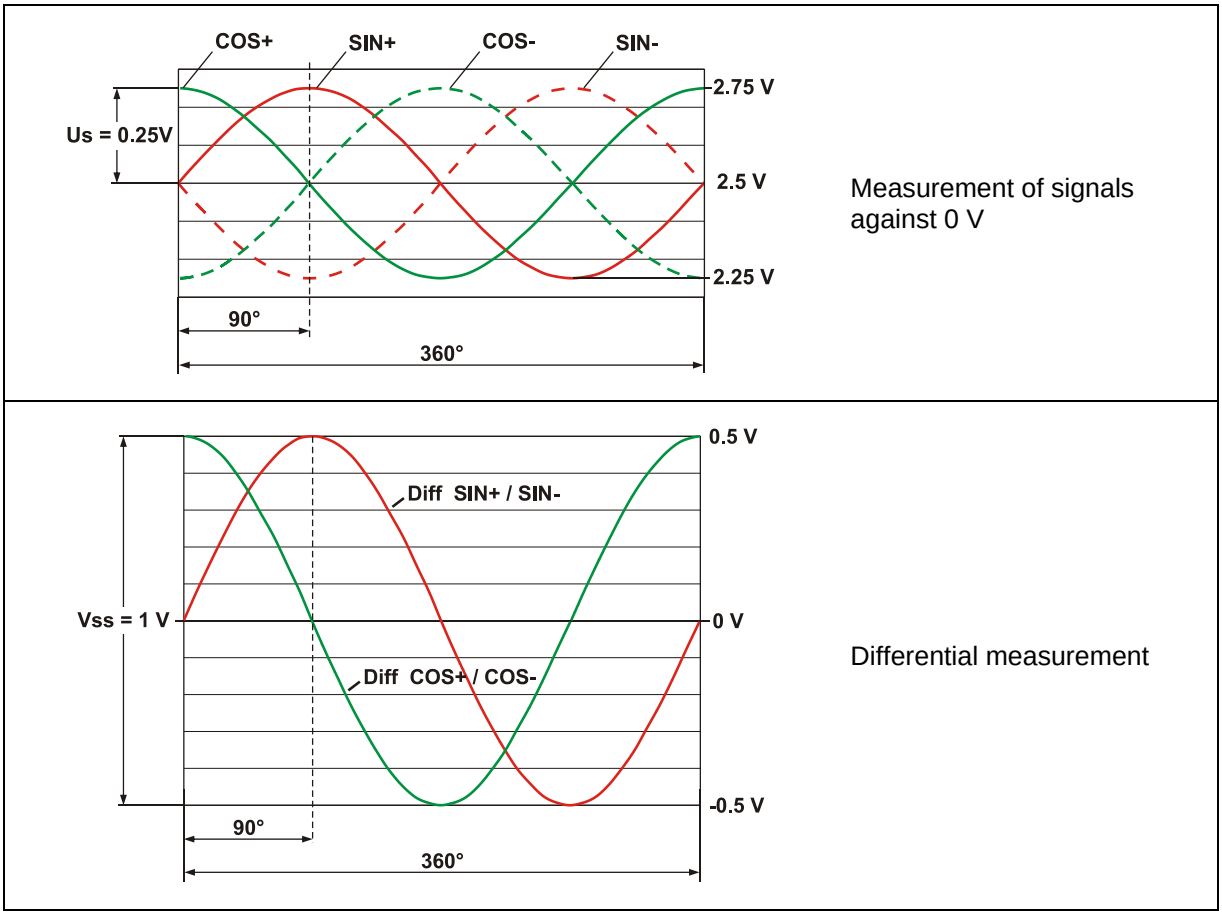

Figure 3: Level definition, SIN/COS interface

© TR Electronic GmbH 2023, All Rights Reserved

3.6.2 HTL / TTL levels (optional)

The incremental interface is optionally also available with HTL or TTL levels. For technical reasons the user must observe the following boundary conditions with these variants: Ambient temperature, cable length, cable capacity, supply voltage and output frequency.

The maximum output frequencies achievable via the incremental interface depend on the cable capacity, supply voltage and ambient temperature. Use of this interface is therefore only advisable if the interface characteristics meet the technical requirements.

From the viewpoint of the measuring system the transmission cable represents a capacitive load, which must be reloaded with each pulse. The charge quantity required varies drastically depending on the cable capacity. This reloading of the cable capacities is responsible for the high power loss and heat that occurs in the measuring system.

The following diagrams show the different dependencies in relation to three different supply voltages, separated into TTL version and HTL version.



TR's own hybrid cable (art. no.: 64-200-021) was used for the measurements.

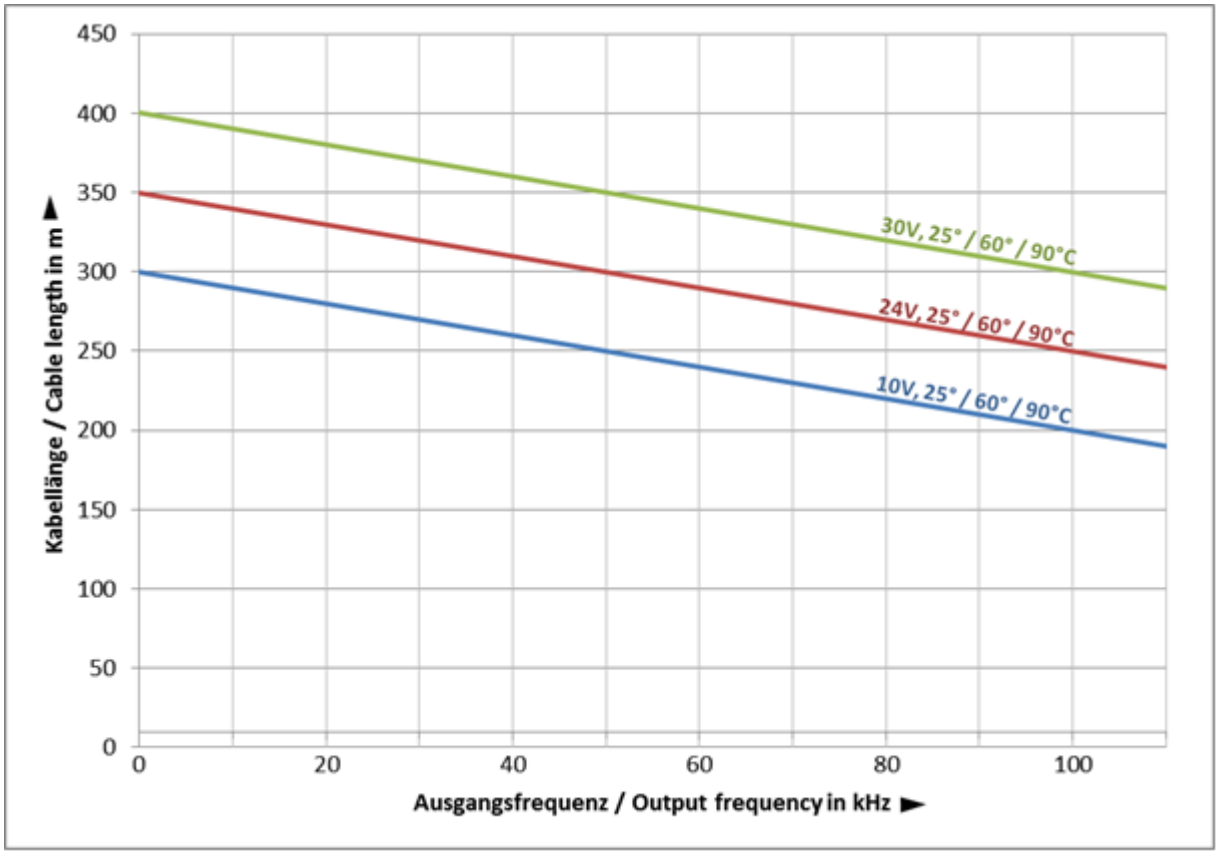

Figure 4: Cable lengths / limit frequencies, TTL version

© TR Electronic GmbH 2023, All Rights Reserved

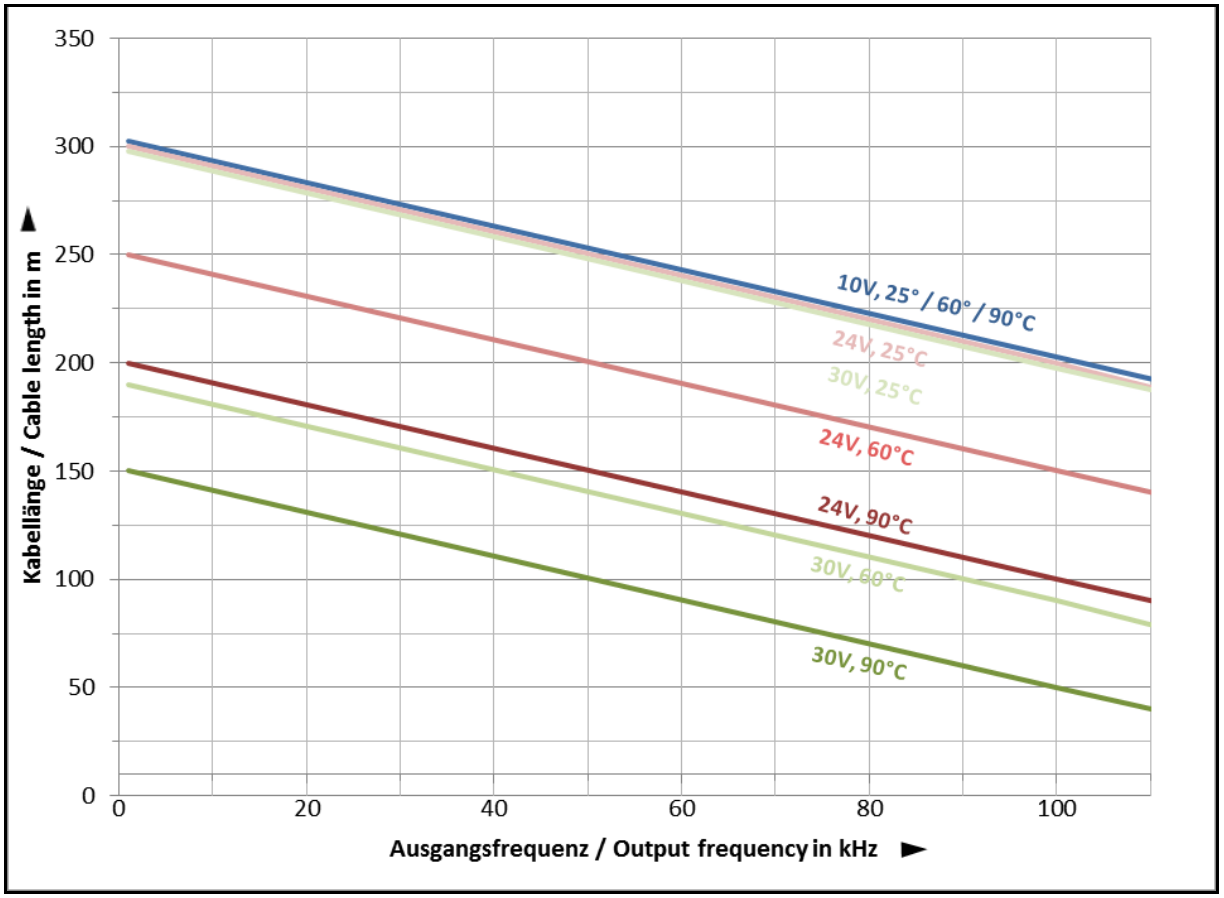

Figure 5: Cable lengths / limit frequencies, HTL version

Other cable parameters, frequencies and ambient temperatures, as well as bearing heat and temperature loading via the shaft and flange, can give a much worse result in practice.

Faultless operation of the incremental interface must therefore be checked with the application-dependent parameters before production mode.

© TR Electronic GmbH 2023, All Rights Reserved

3.7 SSI interface (optional)

Instead of the incremental interface, the measuring system can optionally be equipped with a synchronous-serial absolute SSI interface, in addition to the POWERLINK interface.

Adjustable parameters, see chapter 8.4.1 on page 76.

⚠ WARNING ***This additional interface is not evaluated in relation to safety and must not be used for safety-related purposes!***

- The interface is generally used for monitoring purposes for the transfer of absolute value data to a second NON-safety-related control.

3.7.1 Signal characteristics

Data+ and Clock+ are on High in idle state. This corresponds to the time before point (1) in the diagram shown below.

With the first change of the clock signal from High to Low (1) the device-internal retriggerable monoflop is set with monoflop time t_M .
The time t_M defines the lowest transmission frequency ($T = t_M / 2$). The upper limit frequency results from the total of all signal transit times and is additionally limited by the integrated filter circuits.

With each additional falling clock edge, the active state of the monoflop is extended by time t_M, and this is the case for point (4).
When the monoflop (1) is set, the bit-parallel data present at the internal parallel-serial converter are stored in an input latch of the shift register by an internally generated signal. This ensures that the data do not change during transmission of a position value.

With the first change of the clock signal from Low to High (2) the most significant bit (MSB) of the device information is placed at the serial data output. With each additional rising edge, the next lower bit is pushed to the data output.
At the end of the clock sequence the data lines are kept at 0V (Low) for the duration of the mono-time t_M (4). This also gives the minimum pause time t_p, which must be kept between two consecutive clock sequences and is $2 * t_M$.

The data from the evaluation electronics are read in with the first rising clock edge. Due to a number of factors, a delay time t_V >100 ns results, without cables. As a result, the measuring system pushes the data to the output delayed by the time t_V. Therefore, a “Pause-1” is read at time (2). This must be rejected or can be used in conjunction with a “0” after the LSB data bit for line break monitoring. The MSB data bit is only read at time (3). For this reason, the number of clock pulses must always be one higher (n+1) than the number of data bits to be transmitted.

© TR Electronic GmbH 2023, All Rights Reserved

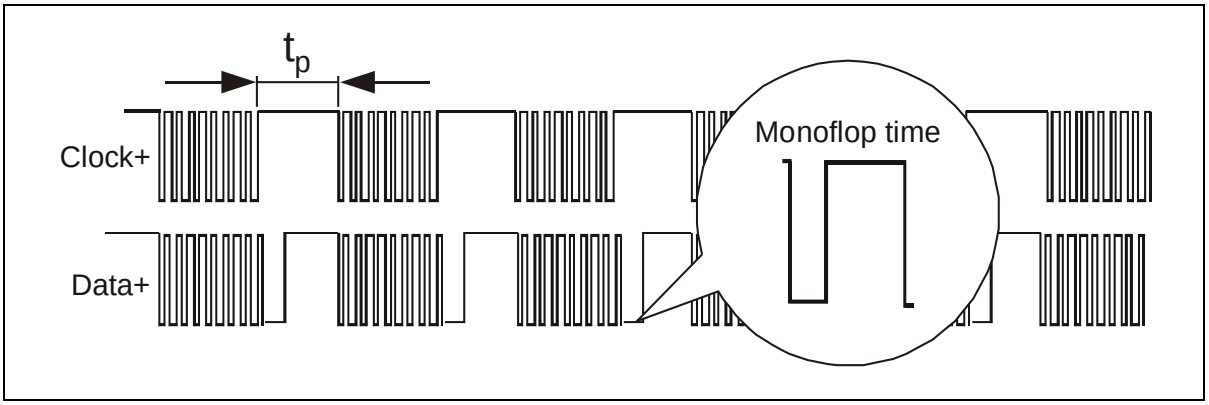

Figure 6: Typical SSI transmission sequences

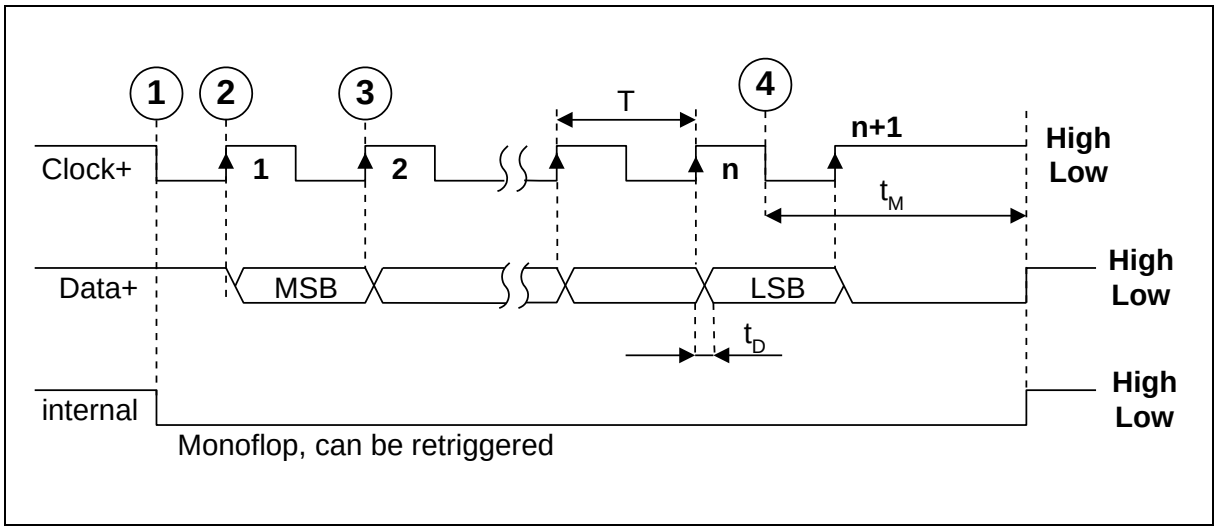

Figure 7: SSI transmission format

© TR Electronic GmbH 2023, All Rights Reserved

3.7.2 Cable lengths

The maximum cable length depends on the SSI clock frequency and the cable composition.

TR's own hybrid cable (art. no.: 64-200-021) was used for the measurements.

SSI clock frequency [kHz]	2000	1000	500	250	125	125	125
Cable length [m]	approx.12.5	approx. 25	approx. 50	approx. 100	approx. 150	approx. 200	approx. 250

Table 1: SSI clock frequency / cable lengths

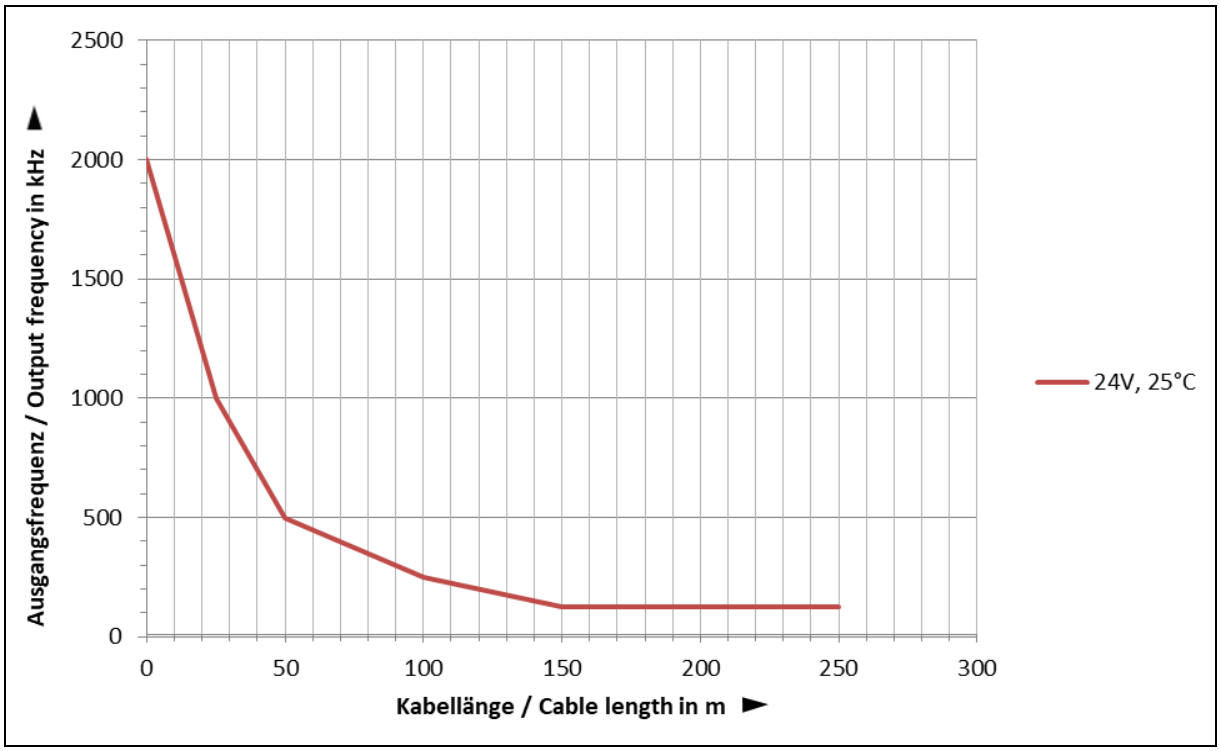

Figure 8: SSI clock frequency / cable lengths

Other cable parameters, frequencies and ambient temperatures, as well as bearing heat and temperature loading via the shaft and flange, can give a much worse result in practice.

Faultless operation of the SSI interface must therefore be checked with the application-dependent parameters before production mode.

© TR Electronic GmbH 2023, All Rights Reserved

4 Commissioning

4.1 POWERLINK / openSAFETY

The POWERLINK functional principle, and the overall communication handling, are described in the *DS 301 Communication Profile Specification*.

The openSAFETY safety protocol is described in the *WDP 304 Safety Profile Specification*.

More Information on POWERLINK or openSAFETY is available on request from the following address:

POWERLINK-OFFICE
B&R Straße 1
5142 Eggelsberg
Austria
Phone: (+43)7748/6586-0
E-Mail: powerlink.office.br@abb.com
Internet: www.br-automation.com/en/technologies/powerlink/

© TR Electronic GmbH 2023, All Rights Reserved

4.2 Device description file

Automation Studio Version V4.0 to V4.4
Based on the control (configuration software), neither the POWERLINK object directory nor the openSAFETY object directory can be read directly into the control via a device description file (XML file). Use of the measuring system in the specified old project environments is only possible using a proprietary hwx file from B&R itself. This hwx file contains the entire device description and can be integrated into “Automation Studio” by means of a firmware update. Such a description file is not provided and operation of measuring systems with the old Automation Studio versions is therefore not possible for the time being.

From Automation Studio V4.5
The XML-based XDD file (NON-safety-related) or XOSDD file (safety-related) together contain all information about the measuring system-specific parameters and operating modes of the measuring system. The XML files are integrated using the POWERLINK network configuration tool, in order to correctly configure or operate the measuring system.

As the configuration can be performed in a modular fashion, there is a whole set of device descriptions:

- **XDD:** Head-end
- **XDD/XOSDD:** TR profile module
- **XDD/XOSDD:** Legacy profile module
- **XDD:** SSI secondary interface
- **XDD:** Incremental secondary interface

Download
- https://www.tr-electronic.de/f/zip/TR-ECE-ID-MUL-0073



Observe installation sequence

*First import the file with file extension *.xosdd, then the file with file extension *.XDD.*

© TR Electronic GmbH 2023, All Rights Reserved

4.3 Bus status display

⚠ WARNING

Destruction, damage and malfunction of the measuring system due to penetration of foreign bodies and moisture!

NOTICE

- Securely seal the access to the LEDs again with the closing screw after completing the settings.

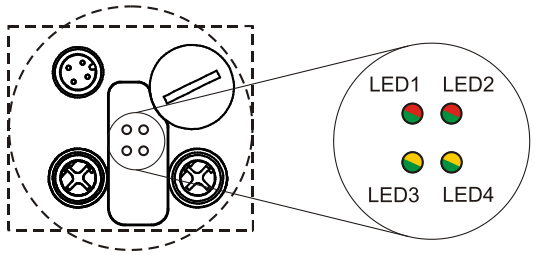

LED1: DevStat, POWERLINK Status (green/red)

LED2: S/E, openSAFETY Status (green/red)

LED3: Port1 L/A, Link/Data Activity (green/yellow)

LED4: Port2 L/A, Link/Data Activity (green/yellow)

Figure 9: Bus status display

4.3.1 Display states and flashing frequency

LED	Description
ON	Continuously ON
OFF	Continuously OFF
Flickering	Same ON and OFF times with a frequency of around 10 Hz: ON = 50 ms, OFF = 50 ms.
Blinking	Same ON and OFF times with a frequency of around 2.5 Hz: ON = 200 ms, OFF = 200 ms.
Single flash	Single short flash, ON around 200 ms, followed by a long OFF time, around 1000 ms.
Double flash	Double short flash, ON/OFF around 200 ms, followed by a long OFF time, around 1000 ms.
Triple flash	Triple short flash, ON/OFF around 200 ms, followed by a long OFF time, around 1000 ms.

4.3.2 Link / Data Activity LEDs

LED	Description
OFF	No Ethernet connection
green	Ethernet connection established
yellow	Data transmission TxD/RxD

For appropriate measures in case of error, see chapter "Troubleshooting and Diagnosis Options", page 81.

© TR Electronic GmbH 2023, All Rights Reserved

4.3.3 POWERLINK Status LED

The function of the Status LED (green) is controlled by the states of the `NMT State Machine`.

LED	Status
OFF	NMT_GS_OFF, NMT_GS_INITIALISATION, NMT_CS_NOT_ACTIVE
Flickering	NMT_CS_BASIC_ETHERNET
Single flash	NMT_CS_PRE_OPERATIONAL_1
Double flash	NMT_CS_PRE_OPERATIONAL_2
Triple flash	NMT_CS_READY_TO_OPERATE
ON	NMT_CS_OPERATIONAL
Blinking	NMT_CS_STOPPED

The function of the status LED (red) is controlled by the `NMT State Machine` and its state transitions.

LED	Status
ON	POWERLINK error

For appropriate measures in case of error, see chapter "Troubleshooting and Diagnosis Options", page 81.

4.3.4 openSAFETY Status LED

The function of the status LED (green) is controlled by the states of the `SNMT State Machine`.

LED	Status
OFF	Initialization, device off
Single flash	PRE_OPERATIONAL
Double flash	OPERATIONAL – connection invalid
ON	OPERATIONAL

The function of the status LED (red) is controlled by the `SNMT State Machine` and its state transitions.

LED	Status
ON (green = OFF)	System or safety error

For appropriate measures in case of error, see chapter "Troubleshooting and Diagnosis Options", page 81.

© TR Electronic GmbH 2023, All Rights Reserved

4.4 IP addressing

Each IP-capable EPL node has an Ipv4 address, a subnet mask and default gateway. These attributes are called the IP parameters:

Ipv4 address
For an EPL network, the private Class C network ID **192.168.100.0** is used. A Class C network supports the IP addresses 1…254. The host ID of the private Class C network ID is identical to the set EPL node ID. Consequently, the last byte of the IP address (host ID) contains the value of the EPL node ID:

IP address	
192,168,100.	Set EPL node ID
Network ID	Host ID

Subnet mask
The subnet mask of an EPL node is 255.255.255.0. This is the subnet mask of a Class C network.

Default gateway
A default gateway is a node (router/gateway) in the EPL network and enables access to another network outside the EPL network.

The IP address 192.168.100.254 can be used for the default gateway presetting. This value can be adapted to valid IP addresses. If a router/gateway is present in the EPL network, the IP address used there must be used.

The following table contains the standard IP parameters:

IP parameter	IP address
IP address	192.168.100.<EPL Node ID>
Subnet mask	255.255.255.0
Default gateway	192.168.100.254, can be adapted

4.5 Commissioning via B&R X20 CPU

Download technical information:

- https://www.tr-electronic.de/f/TR-ECE-TI-DGB-0388

© TR Electronic GmbH 2023, All Rights Reserved

5 Structure of Process Data

5.1 Legacy profile

5.1.1 Safety-related process data

Structure of input data
[*]: I/O channel name

Byte	Bit	Input data	
X+0	2^7-2^0	TR-Status	UNSIGNED8
X+1	2^7-2^0	Speed [SafeTRInputVel]	INTEGER16
X+2	2^{15}-2^8		
X+3	2^7-2^0	Actual value, Multi-Turn, 15 bit [SafeTRInputMulti]	UNSIGNED16
X+4	2^{15}-2^8		
X+5	2^7-2^0	Actual value, Single-Turn, 13 bit [SafeTRInputSingle]	UNSIGNED16
X+6	2^{15}-2^8		
X+7	2^7-2^0	Actual value scaled, 28 bit [SafeTRInputScaled]	UNSIGNED32
X+8	2^{15}-2^8		
X+9	2^{23}-2^{16}		
X+10	2^{31}-2^{24}		

Structure of output data

Byte	Bit	Output data	
X+0	2^7-2^0	TR-Control	UNSIGNED8
X+1	2^7-2^0	Preset, Multi-Turn [SafeTRPresetMultiturn]	UNSIGNED16
X+2	2^{15}-2^8		
X+3	2^7-2^0	Preset, Single-Turn [SafeTRPresetSingleturn]	UNSIGNED16
X+4	2^{15}-2^8		



The process data can only be accessed indirectly via the safety-related I/O channels, see chapter “TR-Legacy” on page 55.

© TR Electronic GmbH 2023, All Rights Reserved

5.1.1.1 Input data

5.1.1.1.1 TR-Status

⚠ WARNING

NOTICE

- **Danger of death, serious physical injuries and/or damage to property due to uncontrolled start-up of the drive system, in the event of non-evaluation of `SafeState` bit 2^4!**
  - ➢ The output actual values are only valid if `SafeState` bit $2^4 = 1$.
    It is recommended to link the `SafeState` bit with the module status `SafeModuleOk` logically with AND:
    `SafeState` (1) **AND** `SafeModuleOk` (TRUE) = actual value valid
    Access to the module status, see chapter 7.1.1 on page 55.

Unsigned8

Byte	X+0
Bit	7 – 0
Data	2^7 – 2^0

Bit	Description
2^0	[`SafeSpeedError`] Bit = 1, if the speed value is outside the range of –32768…+32767.
2^1	[`SafePresetStatus`] Bit = 1, if the preset execution is triggered via the control bit [`SafePresetRequest`]. When the preset has been executed the bit is automatically reset, also see page 39.
2^2	[`SafePresetError`] Bit = 1, if a preset request could not be executed due to excessive speed. The current speed must be in the range of the speed set under `Standstill Tolerance Preset`. The bit can be reset again via the preset control bits [`SafePresetRequest`] and [`SafePresetPreparation`], also see page 39.
2^3	[`SafePresetOK`] Bit = 1, if a preset request was successfully executed.
2^4	[`SafeState`] Bit = 0, - in the initialization phase, or if the initialization could not be successfully completed - if a preset request is initiated via the control bit [`SafePresetPreparation`] - if an exception error is present during the preset execution Bit = 1, - if the initialization was successfully completed - if a preset request was successfully completed and the preset control bits [`SafePresetRequest`] and [`SafePresetPreparation`] have been reset
2^7…2^5	reserved

© TR Electronic GmbH 2023, All Rights Reserved

5.1.1.1.2 Speed

[SafeTRInputVel], INTEGER16

Byte	X+1	X+2
Bit	7 – 0	15 – 8
Data	2^7 – 2^0	2^{15} – 2^8

The speed is output as a two's complement value with preceding sign.

Setting of direction of rotation = forward

– Looking at the flange connection, turn the shaft clockwise:
--> positive speed output

Setting of direction of rotation = backward

– Looking at the flange connection, turn the shaft clockwise:
--> negative speed output

If the measured speed exceeds the display range of –32768…+32767, this results in an overflow, which is indicated in the status register via Bit 2^0. At the time of the overflow the speed stops at the respective +/- maximum value, until the speed is once again in the display range. In this case the message in the Status bits register is also deleted.
The speed is specified in increments per Safe Integration Time.

5.1.1.1.3 Multi turn / Single turn

[SafeTRInputMulti], UNSIGNED16

Byte	X+3	X+4
Bit	7 – 0	15 – 8
Data	2^7 – 2^0	2^{15} – 2^8

[SafeTRInputSingle], UNSIGNED16

Byte	X+5	X+6
Bit	7 – 0	15 – 8
Data	2^7 – 2^0	2^{15} – 2^8

The number of revolutions is noted in the Multi-Turn register, and the current Single-Turn position is noted in steps in the Single-Turn register. Together with the measuring system resolution, max. number of steps per revolution according to type plate, the actual position can then be calculated:

Position in steps = (steps per revolution * number of revolutions) + Single-Turn position

Steps per revolution: 8192 ≙ 13 bit
Number of revolutions: 0…32767 ≙ 15 bit

The output position does not have a preceding sign.

© TR Electronic GmbH 2023, All Rights Reserved

5.1.1.1.4 Actual value scale

[SafeTRInputScaled], UNSIGNED32

Byte	X+7	X+8	X+9	X+10
Bit	7 – 0	15 – 8	23 – 16	31 – 24
Data	2^7 – 2^0	2^{15} – 2^8	2^{23} – 2^{16}	2^{31} – 2^{24}

The current scaled actual position is output via the `Actual value scaled` register.

The output position does not have a preceding sign.

© TR Electronic GmbH 2023, All Rights Reserved

5.1.1.2 Output data

5.1.1.2.1 TR-Control

UNSIGNED8

Byte	X+0
Bit	7 – 0
Data	2^7 – 2^0

Bit	Description
2^0	[SafePresetPreparation] The bit serves to prepare the preset adjustment function. Only if this bit is set can the actual preset be executed via the control bit [SafePresetRequest]. A precise sequence must be observed in order to execute the function, see chapter "Preset adjustment function" on page 39.
2^1	[SafePresetRequest] The bit serves to control the preset adjustment function. When this function is executed, the measuring system is set to the position value stored in the Preset Multi-Turn/Preset Single-Turn registers. A precise sequence must be observed in order to execute the function, see chapter "Preset adjustment function" on page 39.
2^7…2^2	reserved

5.1.1.2.2 Preset multi turn / Preset single turn

[SafeTRPresetMultiturn], UNSIGNED16

Byte	X+1	X+2
Bit	7 – 0	15 – 8
Data	2^7 – 2^0	2^{15} – 2^8

[SafeTRPresetSingleturn], UNSIGNED16

Byte	X+3	X+4
Bit	7 – 0	15 – 8
Data	2^7 – 2^0	2^{15} – 2^8

The desired preset value must be in the range of 0 to 268 435 455 (28 bit). Together with the measuring system resolution, max. number of steps per revolution according to type plate (8192), the corresponding values for Preset Multi-Turn/Preset Single-Turn can then be calculated:

Number of revolutions = desired preset value / steps per revolution

The integer part from this division gives the number of revolutions and must be entered in the Preset Multi-Turn register.

Single-Turn-Position = desired preset value – (steps per revolution* no. of revolutions)

The result of this calculation is entered in the Preset Single-Turn register.

The preset value is set as new position when the preset adjustment function is executed, see chapter "Preset adjustment function" on page 39.

© TR Electronic GmbH 2023, All Rights Reserved

5.1.2 NON-safety-related process data

Structure of input data
[*]: I/O channel name

Byte	Bit	Input data	
X+0	2^7-2^0	Cams	UNSIGNED8
X+1	2^7-2^0	Speed [Velocity]	INTEGER16
X+2	2^{15}-2^8		
X+3	2^7-2^0	Actual value, Multi-Turn, 15 bit [Multiturn]	UNSIGNED16
X+4	2^{15}-2^8		
X+5	2^7-2^0	Actual value, Single-Turn, 13 bit [SingleTurn]	UNSIGNED16
X+6	2^{15}-2^8		
X+7	2^7-2^0	Actual value scaled, 28 bit [Scaled]	UNSIGNED32
X+8	2^{15}-2^8		
X+9	2^{23}-2^{16}		
X+10	2^{31}-2^{24}		



Access to the process data, see chapter “TR-Legacy” on page 53.

5.1.2.1 Input data

5.1.2.1.1 Cams

UNSIGNED8

Byte	X+0
Bit	7 – 0
Data	2^7 – 2^0

Bit	Description
2^0	[Overflow] Bit = 1, if the speed value is outside the range of –32768…+32767.
2^7…2^1	reserved

© TR Electronic GmbH 2023, All Rights Reserved

5.1.2.1.2 Speed

[Velocity], INTEGER16

Byte	X+1	X+2
Bit	7 – 0	15 – 8
Data	2^7 – 2^0	2^{15} – 2^8

The speed is output as a two's complement value with preceding sign.

Setting of direction of rotation = forward

– Looking at the flange connection, turn the shaft clockwise:
  --> positive speed output

Setting of direction of rotation = backward

– Looking at the flange connection, turn the shaft clockwise:
  --> negative speed output

If the measured speed exceeds the display range of –32768…+32767, this results in an overflow, which is indicated in the cam register via Bit 2^0. At the time of the overflow the speed stops at the respective +/- maximum value, until the speed is once again in the display range. In this case the message in the cam register is also deleted.
The speed is specified in increments per Unsafe integration time.

5.1.2.1.3 Multi turn / Single turn

[Multiturn], UNSIGNED16

Byte	X+3	X+4
Bit	7 – 0	15 – 8
Data	2^7 – 2^0	2^{15} – 2^8

[SingleTurn], UNSIGNED16

Byte	X+5	X+6
Bit	7 – 0	15 – 8
Data	2^7 – 2^0	2^{15} – 2^8

The number of revolutions is noted in the Multi-Turn register, and the current Single-Turn position is noted in steps in the Single-Turn register. Together with the measuring system resolution, max. number of steps per revolution according to type plate, the actual position can then be calculated:

Position in steps = (steps per revolution * number of revolutions) + Single-Turn position

steps per revolution: 8192 ≙ 13 bit
Number of revolutions: 0…32767 ≙ 15 bit

The output position does not have a preceding sign.

© TR Electronic GmbH 2023, All Rights Reserved

5.1.2.1.4 Actual value scale

[Scaled], UNSIGNED32

Byte	X+7	X+8	X+9	X+10
Bit	7 – 0	15 – 8	23 – 16	31 – 24
Data	2^7 – 2^0	2^{15} – 2^8	2^{23} – 2^{16}	2^{31} – 2^{24}

The current scaled actual position is output via the `Actual value scaled` register.

The output position does not have a preceding sign.

© TR Electronic GmbH 2023, All Rights Reserved

5.1.3 Preset adjustment function

⚠ WARNING

NOTICE

- **Danger of death, serious physical injury and/or damage to property due to uncontrolled start-up of the drive system during execution of the preset adjustment function!**
  - ➢ Only execute the preset function with the drive system stationary, see chapter "Preset standstill tolerance" on page 59
  - ➢ The relevant drive systems must be locked to prevent automatic start-up
  - ➢ It is advisable to protect the preset triggering via the safety control by means of additional protective measures, such as e.g. key-operated switch, password etc.
  - ➢ The procedure specified below must be observed; in particular, the status bits must be evaluated by the safety control, in order to check successful or incorrect execution
  - ➢ The new position must be checked after execution of the preset function

The preset adjustment function is used to set the currently output position value to any position value within the measuring range. The displayed position can thus be set to a machine reference position purely electronically.

Procedure with safety control

- ➢ Prerequisite: The measuring system is in cyclical data exchange.
- ➢ Write the desired preset value to the `SafeTRPresetMultiturn` and `SafeTRPresetSingleturn` registers, in the output data of the safety control.
- ➢ Set `SafePresetPreparation` and `SafePresetRequest` control bits to 0.
- ➢ Set `SafePresetPreparation` control bit to 1. As a result the `SafeState` status bit is set to 0, and the safety control must then switch the system to a safe state. The output position value is no longer safe!
- ➢ With a rising edge of the `SafePresetRequest` control bit, the preset value is accepted. Receipt of the preset value is acknowledged by setting (=1) the `SafePresetStatus` status bit. When the preset has been executed, the `SafePresetStatus` status bit is reset to 0.
- ➢ After receipt of the preset value, the measuring system checks that all prerequisites for execution of the preset adjustment function are fulfilled. If so, the preset value is written as the new position value. In case of error, the execution is rejected and an error message is output by setting the `SafePresetError`status bit.
- ➢ After successful execution of the preset adjustment function, the measuring system sets the `SafePresetOK`status bit to 1 to indicate to the safety control that the preset execution is complete.
- ➢ Reset the `SafePresetRequest` control bit to 0.
- ➢ Reset the `SafePresetPreparation` control bit to 0. As a result the `SafeState` status bit is reset to 1.
- ➢ Finally, the safety control must check that the new position corresponds to the new set position.

© TR Electronic GmbH 2023, All Rights Reserved

5.1.3.1 Timing diagram

Blue area: Output signals safety control -> measuring system
Orange area: Input signals measuring system -> safety control

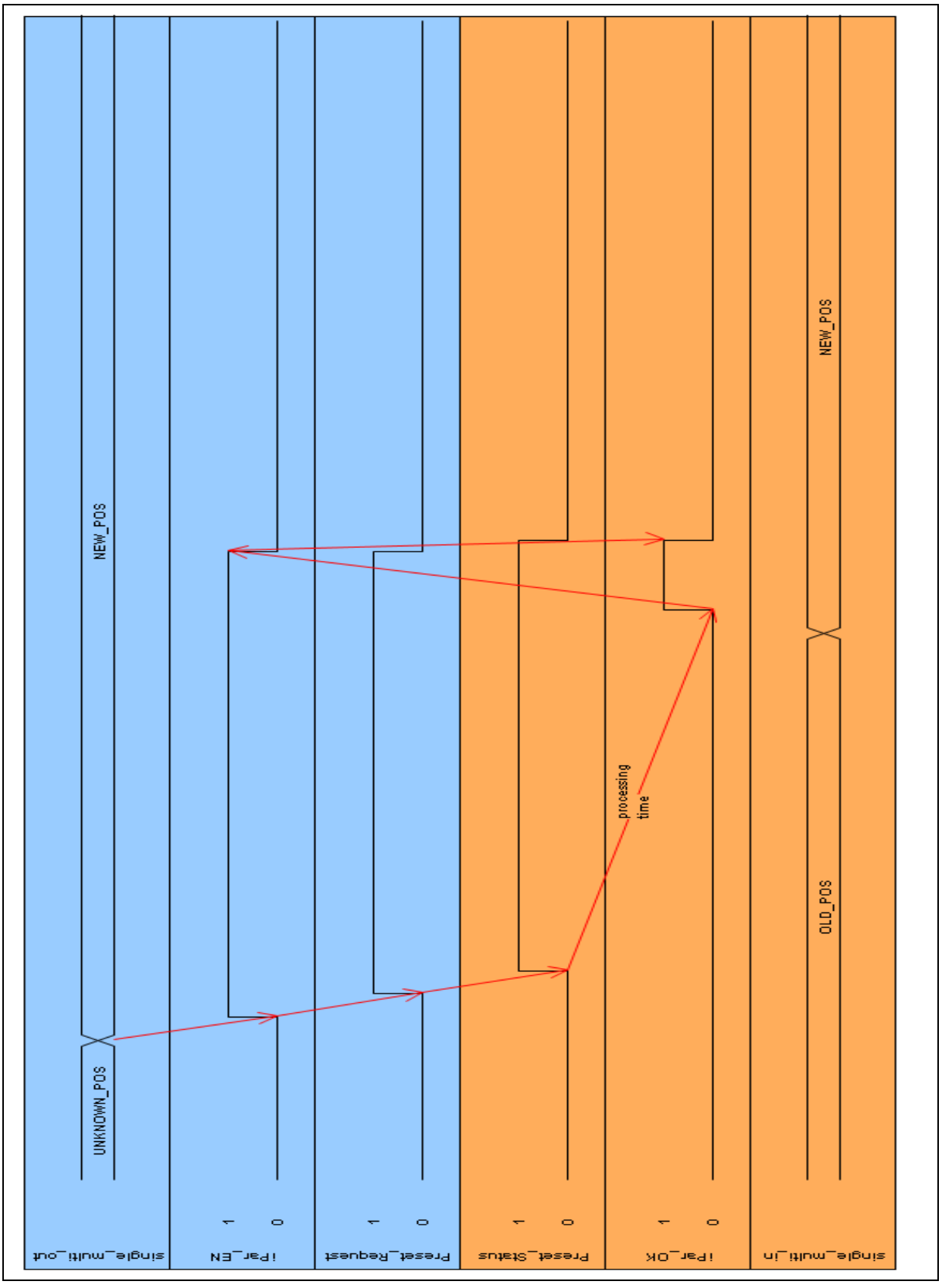

© TR Electronic GmbH 2023, All Rights Reserved

5.2 TR profile

5.2.1 Safety-related process data

Structure of input data
[*]: I/O channel name

Byte	Bit	Input data	
X+0	2^7-2^0	TR-Status 1	UNSIGNED8
X+1	2^7-2^0	TR-Status 2	UNSIGNED8
X+2	2^7-2^0	Actual value scaled, 29 bit [SafeTRInputPos]	UNSIGNED32
X+3	2^{15}-2^8		
X+4	2^{23}-2^{16}		
X+5	2^{31}-2^{24}		
X+6	2^7-2^0	Speed [SafeTRInputVel]	SIGNED32
X+7	2^{15}-2^8		
X+8	2^{23}-2^{16}		
X+9	2^{31}-2^{24}		

Structure of output data

Byte	Bit	Output data	
X+0	2^7-2^0	TR-Control	UNSIGNED8
X+1	2^7-2^0	Preset, Multi-Turn [SafeTRPresetValue]	UNSIGNED32
X+2	2^{15}-2^8		
X+3	2^{23}-2^{16}		
X+4	2^{31}-2^{24}		



The process output data can only be accessed indirectly via the safety-related I/O channels, see chapter “TR profile” on page 56.

The safety-related process input data can also be used in the NON-safety-related data channel.

© TR Electronic GmbH 2023, All Rights Reserved

5.2.1.1 Input data

5.2.1.1.1 TR-Status 1

⚠ WARNING

NOTICE

- **Danger of death, serious physical injuries and/or damage to property due to uncontrolled start-up of the drive system, in the event of non-evaluation of `SafeState` bit 2^4!**
  - ➢ The output actual values are only valid if `SafeState` bit $2^4 = 1$.
    It is recommended to link the `SafeState` bit with the module status `SafeModuleOk` logically with AND:
    `SafeState` (1) **AND** `SafeModuleOk` (TRUE) = actual value valid
    Access to the module status, see chapter 7.1.2 on page 56.

Unsigned8

Byte	X+0
Bit	7 – 0
Data	2^7 – 2^0

Bit	Description
2^0	[`SafeSpeedError`] Bit = 1, if the speed value is outside the range of-2147483648…+2147483647. The bit is automatically reset when the speed returns to the permissible range.
2^1	`[ErrorAckRequest]` The measuring system indicates that a previously adopted safe state can be left again. To do this, an error acknowledgement by the user via the output bit 2^6 `Error Acknowledge` is required.
2^2	[`SafePresetOK`] Bit = 1, if a preset request was successfully executed.
2^3	[`SafePresetError`] Bit = 1, if a preset request could not be executed due to an error. The bit can be reset again via the preset control bits `Preset Request` and `Preset Preparation`, also see chapter 5.2.1.2.1 on page 44.
2^4	[`SafeState`] Bit = 0, - in the initialization phase, or if the initialization could not be successfully completed - if a preset request is initiated via the control bit `Preset Preparation` - if the measuring system is in safe state Bit = 1, - if the initialization was successfully completed - if the preset control bits `Preset Request` and `Preset Preparation` have been reset

© TR Electronic GmbH 2023, All Rights Reserved

2^5	[SafePresetActive] Bit = 1, if the preset function is running. It is reset again by setting SafePresetOK or SafePresetError.
2^6	[PresetLocked] Bit = 1, if a preset is already running in another safety instance. To avoid inconsistencies, a preset can only run in this instance again once the preset process in the other safety instance has completed.
2^7	[ScalingError] Bit = 1, if the measuring system was moved in de-energized state. As it is not possible to check whether a zero transition was generated during this process, the output position must be verified with the desired mechanical position before starting the application. After positive verification the bit can be deleted by executing the preset adjustment function, see chapter 5.2.1.3 on page 45.

5.2.1.1.2 TR-Status 2

1 byte reserved

5.2.1.1.3 Safe position value

[SafeTRInputPos], UNSIGNED32

Byte	X+2	X+3	X+4	X+5
Bit	7 – 0	15 – 8	23 – 16	31 – 24
Data	$2^7 – 2^0$	$2^{15} – 2^8$	$2^{23} – 2^{16}$	$2^{31} – 2^{23}$

The output position does not have a preceding sign.

5.2.1.1.4 Speed

[SafeTRInputVel], SIGNED32

Byte	X+6	X+7	X+8	X+9
Bit	7 – 0	15 – 8	23 – 16	31 – 24
Data	$2^7 – 2^0$	$2^{15} – 2^8$	$2^{23} – 2^{16}$	$2^{31} – 2^{23}$

The speed is output as a two's complement value with preceding sign.

Setting of direction of rotation = forward

Looking at the flange connection, turn the shaft clockwise:

--> positive speed output

Setting of direction of rotation = backward

Looking at the flange connection, turn the shaft clockwise:

--> negative speed output

If the measured speed exceeds the display range, this results in an overflow, which is indicated in the status register via bit 2^0. At the time of the overflow the speed stops at the respective +/- maximum value, until the speed is once again in the display range. In this case the message in the Status bits register is also deleted.

© TR Electronic GmbH 2023, All Rights Reserved

5.2.1.2 Output data

5.2.1.2.1 TR-Control

UNSIGNED8

Byte	X+0
Bit	7 – 0
Data	2^7 – 2^0

Bit	Description
2^0	[SafePresetPreparation] The bit serves to prepare the preset adjustment function. Only if this bit is set can the actual preset be executed via the control bit [SafePresetRequest]. A precise sequence must be observed in order to execute the function, see chapter "Preset adjustment function" on page 45.
2^1	[SafePresetRequest] The bit serves to control the preset adjustment function. When this function is executed, the measuring system is set to the position value stored in the Preset Multi-Turn/Preset Single-Turn registers. A precise sequence must be observed in order to execute the function, see chapter "Preset adjustment function" on page 45.
2^5…2^2	reserved
2^6	[Error Acknowledge] The bit serves for error acknowledgement by the user and occurs at input bit 2^1 ErrorAckRequest =1 from the measuring system.
2^7	reserved

5.2.1.2.2 Preset set value

[SafeTRPresetValue], UNSIGNED32

Byte	X+1	X+2	X+3	X+4
Bit	7 – 0	15 – 8	23 – 16	31 – 24
Data	2^7 – 2^0	2^{15} – 2^8	2^{23} – 2^{16}	2^{31} – 2^{24}

The desired preset value must be in the range of 0 to 536870912 (29 bit).

The preset value is set as new position when the preset adjustment function is executed, see chapter "Preset adjustment function" on page 45.

© TR Electronic GmbH 2023, All Rights Reserved

5.2.1.3 Preset adjustment function

⚠ WARNING

NOTICE

- **Danger of death, serious physical injury and/or damage to property due to uncontrolled start-up of the drive system during execution of the preset adjustment function!**
  - ➢ The relevant drive systems must be locked to prevent automatic start-up
  - ➢ It is advisable to protect the preset triggering via the safety control by means of additional protective measures, such as e.g. key-operated switch, password etc.
  - ➢ The procedure specified below must be observed; in particular, the status bits must be evaluated by the safety control, in order to check successful or incorrect execution
  - ➢ The new position must be checked after execution of the preset function

The preset adjustment function is used to set the currently output position value to any position value within the measuring range. The displayed position can thus be set to a machine reference position purely electronically.

Procedure with safety control

- ➢ Prerequisite: The measuring system is in cyclical data exchange.
- ➢ Write the desired preset value to the `SafeTRPresetValue` register, in the output data of the safety control.
- ➢ Set `SafePresetPreparation` and `SafePresetRequest` control bits to 0.
- ➢ Set `SafePresetPreparation` control bit to 1. As a result the `SafeState` status bit is set to 0, and the safety control must then switch the system to a safe state. The output position value is no longer safe!
- ➢ With a rising edge of the `SafePresetRequest` control bit, the preset value is accepted. Receipt of the preset value is acknowledged by setting (=1) the `SafePresetStatus` status bit. When the preset has been executed, the `SafePresetStatus` status bit is reset to 0.
- ➢ After receipt of the preset value, the measuring system checks that all prerequisites for execution of the preset adjustment function are fulfilled. If so, the preset value is written as the new position value. In case of error, the execution is rejected and an error message is output by setting the `SafePresetError`status bit.
- ➢ After successful execution of the preset adjustment function, the measuring system sets the `SafePresetOK`status bit to 1 to indicate to the safety control that the preset execution is complete.
- ➢ Reset the `SafePresetRequest` control bit to 0.
- ➢ Reset the `SafePresetPreparation` control bit to 0. As a result the `SafeState` status bit is reset to 1.
- ➢ Finally, the safety control must check that the new position corresponds to the new set position.

© TR Electronic GmbH 2023, All Rights Reserved

5.2.1.3.1 Timing diagram

Blue area: Output signals safety control -> measuring system
Orange area: Input signals measuring system -> safety control

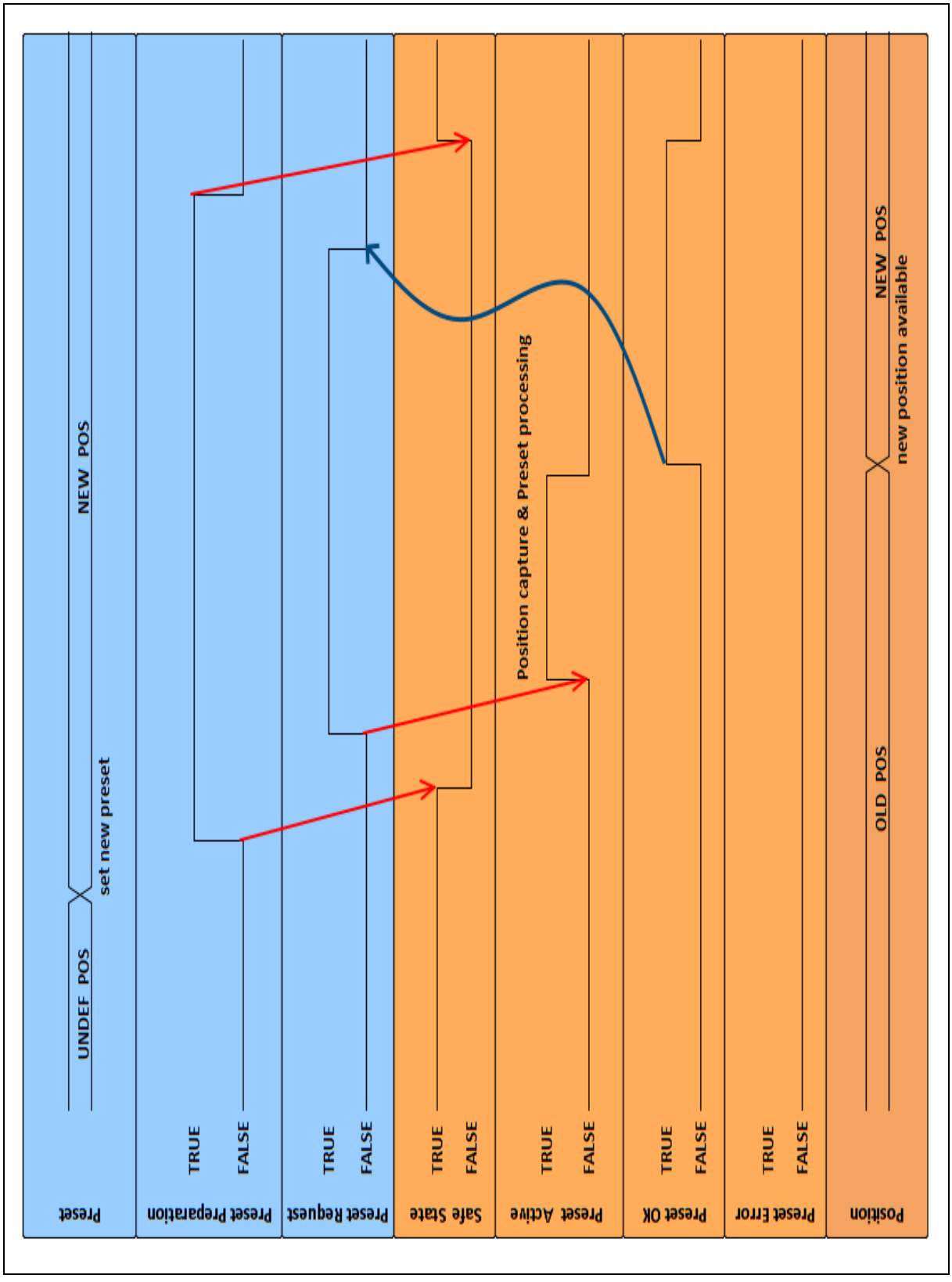

© TR Electronic GmbH 2023, All Rights Reserved

5.2.2 NON-safety-related process data

Structure of input data

Byte	Bit	Input data	
X+0	2^7-2^0	TR-Status	UNSIGNED16
X+1	2^{15}-2^8		
X+2	2^7-2^0	Position value	UNSIGNED32
X+3	2^{15}-2^8		
X+4	2^{23}-2^{16}		
X+5	2^{31}-2^{24}		
X+6	2^7-2^0	Speed value	SIGNED32
X+7	2^{15}-2^8		
X+8	2^{23}-2^{16}		
X+9	2^{31}-2^{24}		

Structure of output data

Byte	Bit	Output data	
X+0	2^7-2^0	TR-Control	UNSIGNED8
X+1	2^7-2^0	Position value set value	UNSIGNED32
X+2	2^{15}-2^8		
X+3	2^{23}-2^{16}		
X+4	2^{31}-2^{24}		



Access to the process data, see chapter “TR profile” on page 54.

5.2.2.1 Input data

5.2.2.1.1 TR-Status

UNSIGNED16

Byte	X+0	X+1
Bit	7 – 0	15 – 8
Data	2^7 – 2^0	2^{15} – 2^8

Bit	Description
2^0	Adjustment was executed (preset executed)
2^6…2^1	Reserved
2^7	Error during preset execution
2^{15}…2^8	Reserved

© TR Electronic GmbH 2023, All Rights Reserved

5.2.2.1.2 Position

[Cyc_In_Position], UNSIGNED32

Byte	X+2	X+3	X+4	X+5
Bit	7 – 0	15 – 8	23 – 16	31 – 24
Data	2^7 – 2^0	2^{15} – 2^8	2^{23} – 2^{16}	2^{31} – 2^{23}

The output position does not have a preceding sign.

5.2.2.1.3 Speed

[Cyc_In_Velocity], SIGNED32

Byte	X+6	X+7	X+8	X+9
Bit	7 – 0	15 – 8	23 – 16	31 – 24
Data	2^7 – 2^0	2^{15} – 2^8	2^{23} – 2^{16}	2^{31} – 2^{23}

The speed is output as a two's complement value with preceding sign.

Setting of direction of rotation = forward

Looking at the flange connection, turn the shaft clockwise:
--> positive speed output

Setting of direction of rotation = backward

Looking at the flange connection, turn the shaft clockwise:
--> negative speed output

5.2.2.2 Output data

5.2.2.2.1 TR-Control

[Cyc_Out_Control], UNSIGNED8

Byte	X+0
Bit	7 – 0
Data	2^7 – 2^0

Bit	Description
2^0	Start preset process
2^7…2^1	reserved

5.2.2.2.2 Preset set value

[Cyc_Out_Preset], UNSIGNED32

Byte	X+1	X+2	X+3	X+4
Bit	7 – 0	15 – 8	23 – 16	31 – 24
Data	2^7 – 2^0	2^{15} – 2^8	2^{23} – 2^{16}	2^{31} – 2^{24}

The desired preset value must be in the range of 0 to 536870912 (29 bit).

The preset value is set as new position when the preset adjustment function is executed for the NON-safety-related data.

© TR Electronic GmbH 2023, All Rights Reserved

5.2.2.3 Preset adjustment function

⚠ WARNING

NOTICE

- **Danger of physical injury and damage to property due to an actual value jump during execution of the preset adjustment function!**
  - ➢ The adjustment function should only be executed when the measuring system is stationary, or the resulting actual value jump must be permitted by both the program and the application!

The preset adjustment function is used to set the currently output position value to any position value within the measuring range. The displayed position can thus be set to a machine reference position purely electronically.

Procedure

- ➢ Prerequisite: The measuring system is in cyclical data exchange.
- ➢ Write the desired preset value to the `Cyc_Out_Preset` register, in the output data of the NON-safety-related control.
- ➢ Set control bit `Cyc_out_Control` from 0 to 1.
- ➢ After successful execution of the preset adjustment function, the measuring system sets status bit 2^0 `Preset executed` to 1 to indicate to the control that the preset execution has been successfully completed.
- ➢ Finally, the control can check that the new position corresponds to the new set position.

If the preset adjustment function could not be executed, status bit 2^7 `Error during preset execution` is set to 1.

© TR Electronic GmbH 2023, All Rights Reserved

6 POWERLINK – Object Directory

Both NON-safety-related and the safety-related data packed in openSAFETY frames are transmitted via the objects in the POWERLINK directory. However, the use of safety-related data in the non-safety-related control is not safe for the purposes of a safety standard.
The overall management occurs via the NON-safety-related control section.

6.1 Communication-specific standard objects, DS-301

Reference: Specification DS-301 Communication Profile Specification

Supported communication-specific standard objects:

Index (h)	Name
1000	NMT_DeviceType_U32
1001	ERR_ErrorRegister_U8
1006	NMT_CycleLen_U32
1008	NMT_ManufactDevName_VS
1009	NMT_ManufactHwVers_VS
100A	NMT_ManufactSwVers_VS
1018	NMT_IdentityObject_REC
1020	CFM_VerifyConfiguration_REC
1030	NMT_InterfaceGroup_0h_REC
1050	NMT_RelativeLatencyDiff_AU32
1300	SDO_SequLayerTimeout_U32
1400	PDO_RxCommParam_00h_REC
1401	PDO_RxCommParam_01h_REC
1600	PDO_RxMappParam_00h_AU64
1601	PDO_RxMappParam_01h_AU64
1800	PDO_TxCommParam_00h_REC
1A00	PDO_TxMappParam_00h_AU64
1C0B	DLL_CNLossSoC_REC
1C0D	DLL_CNLossPReq_REC
1C0F	DLL_CNCRCError_REC
1C14	DLL_CNLossOfSocTolerance_U32
1E40	NWL_IpAddrTable_0h_REC
1E4A	NWL_IpGroup_REC
1F81	NMT_NodeAssignment_AU32
1F82	NMT_FeatureFlags_U32
1F83	NMT_EPLVersion_U8
1F8C	NMT_CurrNMTState_U8
1F8D	NMT_PResPayloadLimitList_AU16
1F93	NMT_EPLNodeID_REC
1F98	NMT_CycleTiming_REC
1F99	NMT_CNBasicEthernetTimeout_U32
1F9A	NMT_HostName_VSTR
1F9E	NMT_ResetCmd_U8

© TR Electronic GmbH 2023, All Rights Reserved

6.2 Relevant manufacturer-specific objects

6.2.1 Object 2000h: Device configuration

The object contains the integration time for calculating the NON-safety-related speed and the value (MAC address) for the “Unique Device Identification” (UDID). The integration time is set via the parameterization options of the NON-safety-related control part.

Index	Subindex	Comment	Default value	Type	Attr.
2000h	0	No. of entries	3	UNSIGNED8	ro
	1	Integration_time_unsafe	20	UNSIGNED16	rw
	2	UDID low	0x12xxxxxx	UNSIGNED32	ro
	3	UDID high	0x0003	UNSIGNED16	ro

6.2.2 Object 2012h: NON-safety-related data – Legacy / TR profile

The object contains the cyclic NON-safety-related input data of the Legacy profile or the input and output data of the TR profile, structure see from page 36 or from page 47. Access is via the I/O channels of the NON-safety-related control part.

Index	Subindex	Comment	Default value	Type	Attr.
2012h	0	No. of entries	2	UNSIGNED8	ro
	0x1E	Indata_unsafe	-	Record	ro
	0x20	Outdata_unsafe	-	Record	rw

6.2.3 Object 2020h: Status information - head-end

The object contains the cyclic status information of the head-end. Only bit 2^4 is currently supported: Bit 2^4 = 1 (0x0000 0010) means that the measuring system operates synchronously with the POWERLINK cycle.

Index	Subindex	Comment	Default value	Type	Attr.
2020h	0	No. of entries	1	UNSIGNED8	ro
	1	Status	-	UNSIGNED32	ro

© TR Electronic GmbH 2023, All Rights Reserved

6.2.4 Object 4002h: Indata_safe – Legacy / TR profile

The object contains the cyclic safety-related input data of the Legacy profile or the TR profile, structure see from page 31 or from page 41. Access is via the I/O channels of the NON-safety-related control part.

Index	Subindex	Comment	Default value	Type	Attr.
4002h	0	No. of entries	1	UNSIGNED8	ro
	1	Indata_safe	-	Record	ro

6.2.5 Object 4003h: Outdata_safe – Legacy / TR profile

The object contains the cyclic safety-related output data of the Legacy profile or the TR profile, structure see from page 31 or from page 41. Access is via the I/O channels of the NON-safety-related control part.

Index	Subindex	Comment	Default value	Type	Attr.
4003h	0	No. of entries	1	UNSIGNED8	ro
	1	Outdata_safe	-	Record	rw

© TR Electronic GmbH 2023, All Rights Reserved

6.3 Access to the POWERLINK object directory

Access to the NON-safety-related data is via the internally assigned channel names.
The following I/O channels are provided by the NON-safety-related control part:

6.3.1 TR-Legacy

Channel name	I/O	Type	Description	Page
ModuleOk	***I***	***BOOL***	***System parameter***	***14/76***
Overflow	I	BOOL	Speed overflow	36
Velocity	I	INTEGER16	Speed value	37
Multi-turn	I	UNSIGNED16	Actual value, MultiTurn component	37
SingleTurn	I	UNSIGNED16	Actual value, SingleTurn component	37
Scaled	I	UNSIGNED32	Scaled actual value	38
SafeSpeedError	I	BOOL	Speed overflow	32
SafePresetStatus	I	BOOL	Preset status bit	32
SafePresetError	I	BOOL	Preset error bit	32
SafePresetOK	I	BOOL	Preset execution OK	32
SafeState	I	BOOL	Preset in process	32
SafeTRInputVel	I	INTEGER16	Speed value	33
SafeTRInputMulti	I	UNSIGNED16	Actual value, MultiTurn component	33
SafeTRInputSingle	I	UNSIGNED16	Actual value, SingleTurn component	33
SafeTRInputScaled	I	UNSIGNED32	Scaled actual value	34

© TR Electronic GmbH 2023, All Rights Reserved

6.3.2 TR profile

Channel name	I/O	Type	Description	Page
ModuleOk	***I***	***BOOL***	***System parameter***	***14/76***
Cyc_In_Status	I	UNSIGNED16	TR_Status, NON-safety-related	47
Cyc_In_Position	I	UNSIGNED32	Position, NON-safety-related	48
Cyc_In_Velocity	I	SIGNED32	Speed, NON-safety-related	48
Cyc_Out_Control	O	UNSIGNED8	TR-Control, NON-safety-related	48
Cyc_Out_Preset	O	UNSIGNED32	Preset set value, NON-safety-related	48
SafeSpeedError	I	BOOL	Speed overflow	42
ErrorAckRequest	I	BOOL	reserved	42
SafePresetOK	I	BOOL	Preset execution OK	42
SafePresetError	I	BOOL	Preset error bit	42
SafeState	I	BOOL	Safety status appl.	42
SafePresetActive	I	BOOL	Preset status	43
PresetLocked	I	BOOL	reserved	43
ScalingError	I	BOOL	Safe scaling error	43
TR-Status 2	I	UNSIGNED8	reserved	43
SafeTRInputPos	I	UNSIGNED32	Scaled actual value	43
SafeTRInputVel	I	SIGNED32	Speed	43

© TR Electronic GmbH 2023, All Rights Reserved

7 openSAFETY – Object Directory

Safety-related data are transmitted via the objects in the openSAFETY directory. The entire management is undertaken by the safety-related control part, the so-called *openSAFETY Configuration Manager* (SCM).

7.1 Access to openSAFETY – I/O data

Access to the cyclic safety-related data is via the internally assigned channel names. The following I/O channels are provided for the openSAFETY Configuration Manager:

7.1.1 TR-Legacy

Channel name	I/O	Type	Description	Page
SafeModuleOk	***I***	***BOOL***	***System parameter***	***14/76***
SafeSpeedError	I	BOOL	Speed overflow	32
SafePresetStatus	I	BOOL	Preset status bit	32
SafePresetError	I	BOOL	Preset error bit	32
SafePresetOK	I	BOOL	Preset execution OK	32
SafeState	I	BOOL	Preset in process	32
SafeTRInputVel	I	INTEGER16	Speed value	33
SafeTRInputMulti	I	UNSIGNED16	Actual value, MultiTurn component	33
SafeTRInputSingle	I	UNSIGNED16	Actual value, SingleTurn component	33
SafeTRInputScaled	I	UNSIGNED32	Scaled actual value	34
SafePresetPreparation	O	BOOL	Preset preparation bit	35
SafePresetRequest	O	BOOL	Preset execution bit	35
SafeTRPresetMultiturn	O	INTEGER16	Preset value, MultiTurn component	35
SafeTRPresetSingleturn	O	INTEGER16	Preset value, SingleTurn component	35

© TR Electronic GmbH 2023, All Rights Reserved

7.1.2 TR profile

Channel name	I/O	Type	Description	Page
SafeModuleOk	***I***	***BOOL***	***System parameter***	***14/76***
SafeSpeedError	I	BOOL	Speed overflow	42
SafeErrorAckRequest	I	BOOL	reserved	42
SafePresetOK	I	BOOL	Preset execution OK	42
SafePresetError	I	BOOL	Preset error bit	42
SafeState	I	BOOL	Preset in process	42
SafePresetActive	I	BOOL	Preset status bit	43
SafePresetLocked	I	BOOL	Preset cannot be executed currently because already active	43
SafeScalingError	I	BOOL	Scaling error	43
SafeTR-Status 2	I	UNSIGNED8	reserved	43
SafeTRInputPos	I	UNSIGNED32	Scaled actual value	43
SafeTRInputVel	I	SIGNED32	Speed	43
SafePresetPreparation	O	BOOL	Preset preparation bit	44
SafePresetRequest	O	BOOL	Preset execution bit	44
SafeTRPresetValue	O	UNSIGNED32	Preset value	44

© TR Electronic GmbH 2023, All Rights Reserved

8 Parameterization - Modular Measuring System

Input masks are normally made available by the controls, where the user can enter the parameter data or select it from lists. The structure of the input masks is stored in the device master files.

DANGER

NOTICE

- **Danger of death, serious physical injury and/or damage to property due to malfunction, caused by incorrect parameterization!**
  - ➢ The system manufacturer must ensure correct functioning by carrying out a protected test run during commissioning and after each parameter change.

The measuring system has been developed as a modular POWERLINK device and can be individually parameterized using modular child elements. The child elements are contained in different device descriptions (*.xdd/*.osdd files):

8.1 Head-end

`0x0000025C_TR-Electronic_CD_582_-EPL_Head.xdd`
Head-end device description – this must always be configured as the first module:



The head-end is not an openSAFETY device. It is not visible in the catalog when the filter is activated for the `Safety` product group.

© TR Electronic GmbH 2023, All Rights Reserved

8.2 “Legacy” child element

```
0x0000025C_TR-Electronic_CD_582_-EPL_Legacy.xdd
0x0000025C_TR-Electronic_CD_582_-EPL_Legacy.osdd
```

The Legacy child element is intended for using the measuring system in compatibility with the 75-series (replacement device).



8.2.1 Safety-related parameters

With the safety-related parameters, application-dependent device characteristics are defined and provided via the openSAFETY Configuration Manager.

Parameter	Type	Description
Rotational direction [VIT Rotary Direction]	BOOL	0: backward 1: forward [default]
Safe integration time [Integration Time]	UNSIGNED16	Default = 2 Range: 1-10
Window increments [Window Increments]	UNSIGNED16	Default = 1000 Range: 50-4000
Preset standstill tolerance [Idleness Preset Tolerance]	UNSIGNED16	Default = 1 Range: 1-5

8.2.1.1 Rotational direction

This parameter defines the current counting direction of the position value looking at the flange connection, turning the shaft clockwise.

Forward = counting direction increasing
Backward = counting direction decreasing

Default value = forward

8.2.1.2 Safe integration time

This parameter serves for calculating the safe speed, which is output via the process data of the openSAFETY channel. High integration times enable high-resolution measurements at low speeds. Low integration times show speed changes more quickly and are suitable for high speeds and high dynamics. The time basis is permanently set to 50 ms. You can thus use the value range from 1…10 to set 50…500 ms.

Default value = 100 ms.

© TR Electronic GmbH 2023, All Rights Reserved

8.2.1.3 Window increments

This parameter defines the maximum permissible position deviation in increments of the master / slave scanning systems integrated into the measuring system. The permissible tolerance window is basically dependent on the maximum speed occurring in the system and must first be determined by the system operator. Higher speeds require a larger tolerance window. The value range extends from 50…4000 increments.

Default value = 1000 increments.



The larger the window increments the greater the angle, until an error is detected.

8.2.1.4 Preset standstill tolerance

This parameter defines the maximum permissible speed in `increments` per `Safe integration time` for execution of the preset function, see page 39. The permissible speed is dependent on the bus behavior and the system speed, and must be determined by the system operator first. The value range extends from 1 increment per `Safe integration time` to 5 increments per `Safe integration time`. This means that the measuring system shaft must be practically at a standstill for the preset function to be executed.

Default value = 1 increment per default value `Safe integration time`.

8.2.2 NON-safety-related parameters

The parameters are provided by the NON-safety-related control part.

Parameter	Type	Description
Unsafe integration time	UNSIGNED16	Default = 20 Range: 1-100

8.2.2.1 Unsafe integration time

This parameter serves for calculating the unsafe speed, which is output via the process data of the NON-safety-related data channel. High integration times enable high-resolution measurements at low speeds. Low integration times show speed changes more quickly and are suitable for high speeds and high dynamics. The time basis is permanently set to 5 ms. You can thus use the value range from 1…100 to set 5…500 ms.

Default value = 100 ms.

© TR Electronic GmbH 2023, All Rights Reserved

8.3 “TR Profile” child element

```
0x0000025C_TR-Electronic_CD_582_-EPL_TR-Profile.xdd
0x0000025C_TR-Electronic_CD_582_-EPL_TR-Profile.osdd
```

The TR Profile child element can be configured if you wish to operate the measuring system with the standard TR profile. This enables scalable actual values with different speed units, together with filtering.



8.3.1 Safety-related parameters

Byte	Parameter	Data type	Description		Page
0	Rotational direction	Bit	Bit 0	0: Backward 1: `Forward`	61
1-4	Measuring length	Unsigned32	No. of steps/revolution * no. of revolutions Default value: `536870912` Value range: 2-536870912		62
5-8	Revolutions numerator	Unsigned32	Number of steps per revolution numerator value Default value: `65536` Value range: 1-256000		62
9-12	Revolutions denominator	Unsigned32	Number of steps per revolution denominator value Default value: `1` Value range: 1-16384		62
13	Speed format	Unsigned8	Unit 000: rev/sec * factor 001: `rpm * factor` 010: rev/hour * factor 011: steps/integration time		65
14-15	Speed factor	Unsigned16	Selected unit * factor Default value: `1` Value range: 1-1000		65
16-17	Speed integration time	Unsigned16	Integration time [ms] Default value: `100` Value range: 1-1000		66

© TR Electronic GmbH 2023, All Rights Reserved

Continued

18	Speed filter type	Unsigned8	Filter type 0: static 1: dynamic	66
19	Speed filter strength	Unsigned8	Filter intensity value Default value: 0 Value range: 0-10	67
20-21	Window increments	Unsigned16	Maximum permissible position deviation in increments Default value: 1000 Value range: 50-4000	67

8.3.1.1 Rotational direction

⚠ WARNING

Danger of death, serious physical injury and/or damage to property due to a jump of the absolute value following a change in the rotational direction function!

NOTICE

- The internal calculation algorithm produces different absolute positions for the counting direction settings backward or forward. After a change of rotational direction, the correct function must therefore be ensured by means of a protected test run. It may be necessary to adapt the output position using the preset function.

Selection	Value	Description	Default
Backward	0	Measuring system – position decreasing in clockwise direction (facing shaft, flange-mounting)	
Forward	1	Measuring system – position increasing in clockwise direction (facing shaft, flange-mounting)	X

© TR Electronic GmbH 2023, All Rights Reserved

8.3.1.2 Scaling parameters

⚠ WARNING

NOTICE

Risk of physical injury and material damage due to shifting of the zero point when the measuring system is switched on again after positioning in de-energized state!

If the settings of the scaling parameters specified below deviate from the default settings, the zero point of the multiturn measuring system may be lost if more than the permissible number of revolutions are executed in de-energized state!

- SIL2 – measuring system: Make sure that positioning operations in de-energized state take place within 3200 revolutions on a multiturn measuring system.
- SIL3 – measuring system: Make sure that positioning operations in de-energized state take place within 320 revolutions on a multiturn measuring system.
- If this cannot be ensured, the output position must be verified with the desired mechanical position before starting the application.
  If the permissible revolutions have been exceeded, this is indicated when the measuring system restarts via the cyclic process input data in `TR-Status1`, bit 7 `Scaling Error` = 1. After positive verification the `Scaling Error` bit can be deleted by executing the preset adjustment function, see chapter “Preset adjustment function” on page 45.

The physical resolution of the measuring system can be changed using the scaling parameters. The measuring system supports the gear function for round axes.

This means that the ***number of steps per revolution*** and the quotient of `revolutions numerator/revolutions denominator` can be a decimal number.

The position value output is calculated with a zero point correction, the counting direction set and the gearbox parameter entered.

MEASURING LENGTH

Defines the ***total number of steps*** of the measuring system, before the measuring system starts at zero again.

Lower limit	2 steps
Upper limit	536 870 912 steps
Default	**536870912**

The actual upper limit value to be entered for the `measuring length` depends on the measuring system design and can be calculated using the formula below. As the value "0" is already counted as a step, the end value = measuring length in steps - 1.

Measuring length = steps per revolution * number of revolutions

For the purposes of calculation, the parameters ***Steps/revolution*** and ***Number of revolutions*** can be taken from the measuring system type plate.

© TR Electronic GmbH 2023, All Rights Reserved

REVOLUTIONS NUMERATOR / REVOLUTIONS DENOMINATOR

These two parameters together define the ***number of revolutions***, before the measuring system starts at 0 again.

As decimal numbers are not always finite (as is e.g. 3.4), but may have an infinite number of digits after the decimal point (e.g. 3.43535355358774...) the number of revolutions is entered as a fraction.

Numerator lower limit	1
Numerator upper limit	256000
Default numerator	**65536**

Denominator lower limit	1
Denominator upper limit	16384
Denominator default	**1**

Formula for gearbox calculation:

$$\text{Measuring range in steps} = \text{number of steps per revolution} * \frac{\text{Number of numerator revolutions}}{\text{Number of denominator revolutions}}$$

If it is not possible to enter parameter data in the permitted ranges of numerator and denominator, the attempt must be made to reduce these accordingly. If this is not possible, it may only be possible to represent the relevant decimal number approximately. The resulting minor inaccuracy accumulates for real round axis applications (infinite applications with motion in one direction).
A solution is, for example, to perform adjustment after each revolution or to adapt the mechanics or gear ratio accordingly.

The parameter **Number of steps per revolution** may also be a decimal number, however the `measuring length` may not. The result of the above formula must be rounded up or down. The resulting error is distributed over the total number of revolutions programmed and is therefore negligible.

© TR Electronic GmbH 2023, All Rights Reserved

Preferably for linear axes (forward and backward motion):

The parameter `denominator revolutions` can be programmed as a fixed value of "1" for linear axes. The parameter `numerator revolutions` is programmed slightly higher than the required number of revolutions. This ensures that the measuring system does not generate an actual value jump (zero transition) if the travel is slightly exceeded. For the sake of simplicity, the full revolution range of the measuring system can also be programmed.

The following example serves to illustrate the approach.

Given:

Measuring system with 4096 steps/rev. and max. 4096 revolutions

Resolution 1/100 mm

Make sure that the measuring system is programmed in its full resolution and measuring range (4096x4096):
Measuring length in steps = 16777216,
Numerator revolutions = 4096
Denominator revolutions = 1
Move the mechanics to be measured to the left stop

Set measuring system to "0" by adjustment

Set the mechanics to be measured to the end position

Measure the mechanical distance covered in mm

Read off the actual position of the measuring system on the connected control

Assumed:

Distance covered = 2000 mm

Measuring system actual position after 2000 mm = 607682 steps

Derived:

Number of revolutions covered = 607682 steps / 4096 steps/rev.
= **148.3598633 revolutions**

Number of mm / revolution = 2000 mm / 148.3598633 revs. = **13.48073499mm / rev.**

For 1/100mm resolution this equates to a **number of steps / revolution** of **1348.073499**

Required programming:

Number of numerator revolutions = ***4096***
Number of denominator revolutions = ***1***

$$\text{Measuring length in steps} = \text{number of steps per revolution} * \frac{\text{Number of numerator revolutions}}{\text{Number of denominator revolutions}}$$

$$= 1348.073499 \text{ steps / rev.} * \frac{4096 \text{ numerator revolutions}}{1 \text{ denominator revolution}}$$

= ***5521709 steps*** *(rounded off)*

© TR Electronic GmbH 2023, All Rights Reserved

8.3.1.3 Speed format

Indicates the resolution at which the speed is calculated and output.

The speed is output signed, as a two's complement:

Counting direction setting = forward

Output positive, with clockwise rotation
(facing flange-mounting)

Counting direction setting = backward

Output negative, with clockwise rotation
(facing flange-mounting)

If the speed value range (-2147483648…+2147483647) is exceeded or not reached, the limit values (0x7FFF FFFF or 0x8000 0000) are output and in `TR-Status1` bit 2^0 `Velocity Error` is set to 1.

Selection	Value	Speed output	Default
rev/sec * factor	0	Output in [rev./second], multiplied by the factor set under the parameter *`Speed factor`*.	
rev/min * factor	1	Output in [rev./minute], multiplied by the factor set under the parameter *`Speed factor`*.	X
rev/hour * factor	2	Output in [rev./hour], multiplied by the factor set under the parameter *`Speed factor`*.	
steps/integration time	3	Output in [steps/ms] Resolution: scaled steps/rev.	

8.3.1.4 Speed factor

Indicates the factor value for the parameter *`Speed format`*.

Lower limit	1
Upper limit	1000
Default	**1**

© TR Electronic GmbH 2023, All Rights Reserved

8.3.1.5 Speed integration time

Indicates the integration time in [ms] for the *Speed format*, see page 65.

The parameter generally serves to calculate the speed, which is output via the cyclic process data. High integration times enable high-resolution measurements at low speeds. Low integration times show speed changes more quickly and are suitable for high speeds and high dynamics.

Lower limit	1 ms
Upper limit	1000 ms
Default	**100 ms**

Example

Given:
- Programmed resolution = 8192 steps per revolution
- Speed = 4800 revolutions per minute
- Integration time t_i = 50 ms = 0.05 s

Find:
- Output value in steps/integration time

$$\text{Number of steps / s} = \frac{8192 \text{ steps} * 4800 \ \cancel{\text{rev.}}}{\cancel{\text{rev.}} * 60 \text{ s}} = \frac{655360 \text{ steps}}{1 \text{ s}}$$

$$\text{Number of steps / } t_i = \frac{655360 \text{ steps}}{1 \text{ s}} * 0.05 \text{ s} = 32768 \text{ steps}$$

Steps/integration time = 32768 steps / 50 ms

8.3.1.6 Speed filter type

Also see the parameter *Speed filter strength* on page 67.

Selection	Value	Description	Default
static	0	The low-pass filter characteristic influences the speed actual value output, independently of the current movement or acceleration status of the drive.	X
dynamic	1	The low-pass filter characteristic is deactivated, as soon as the measuring system detects a significant change in acceleration in the speed signal. The low-pass filter is reactivated, as soon as the measuring system detects a uniform movement.	

© TR Electronic GmbH 2023, All Rights Reserved

8.3.1.7 Speed filter strength

The output speed can be averaged using the `Speed filter strength` parameter. The averaging strength can be preset. You can also select whether the filtering is dynamically switched off in acceleration phases, see parameter `Speed filter type`. This means that the speed signal can quickly follow the actual course in the event of changes and is stable in the stationary range.

Data type	Bit range
Lower limit	0
Upper limit	10
Default	**0**

0: no filtering

1: weak filtering, high limit frequency

. . .

10: strong filtering, low limit frequency

8.3.1.8 Window increments

This parameter defines the maximum permissible position deviation in increments of the master / slave scanning systems integrated into the measuring system. The permissible tolerance window is basically dependent on the maximum speed occurring in the system and must first be determined by the system operator. Higher speeds require a larger tolerance window. The value range extends from 50…4000 increments. Default value = 1000 increments.



The larger the window increments the greater the angle, until an error is detected.

For the position deviation in increments, the unscaled resolution of 13 bit = 8192 steps/revolution is always used as the basis.

© TR Electronic GmbH 2023, All Rights Reserved

8.3.2 NON-safety-related parameters

Parameter	Data type	Description		Page
Rotational direction	Bit	Bit 0	0: Backward 1: Forward	69
Measuring length	Unsigned32	No. of steps/revolution * no. of revolutions Default value: 536870912 Value range: 2-536870912		69
Revolutions numerator	Unsigned32	Number of steps per revolution numerator value Default value: 65536 Value range: 1-256000		69
Revolutions denominator	Unsigned32	Number of steps per revolution denominator value Default value: 1 Value range: 1-16384		69
Speed format	Unsigned8	Unit 000: rev/sec * factor 001: rpm * factor 010: rev/hour * factor 011: steps/integration time		72
Speed factor	Unsigned16	Selected unit * factor Default value: 1 Value range: 1-1000		72
Speed integration time	Unsigned16	Integration time [ms] Default value: 100 Value range: 1-1000		73
Speed filter strength	Unsigned8	Filter intensity value Default value: 0 Value range: 0-10		73
Speed filter type	String (selection via combo box)	Filter type 0: Filter static 1: Filter dynamic		74
Remote substitute value	String (selection via combo box)	0: no substitute value 1: Unsafe substitute value		74
Parameter linked to safe sensor	String (selection via combo box)	0: not linked 1: linked		74

© TR Electronic GmbH 2023, All Rights Reserved

8.3.2.1 Rotational direction

⚠ WARNING

NOTICE

Danger of death, serious physical injury and/or damage to property due to a jump of the absolute value following a change in the rotational direction function!

- The internal calculation algorithm produces different absolute positions for the counting direction settings `backward` or `forward`. After a change of rotational direction, the correct function must therefore be ensured by means of a protected test run. It may be necessary to adapt the output position using the preset function.

Selection	Value	Description	Default
Backward	0	Measuring system – position decreasing in clockwise direction (facing shaft, flange-mounting)	
Forward	1	Measuring system – position increasing in clockwise direction (facing shaft, flange-mounting)	X

8.3.2.2 Scaling parameters

⚠ WARNING

NOTICE

Risk of physical injury and material damage due to shifting of the zero point when the measuring system is switched on again after positioning in de-energized state!

If more than 32767 revolutions are executed in de-energized state, the zero point of the multiturn measuring system may be lost!

- Make sure that positioning operations in de-energized state take place within 32767 revolutions on a multiturn measuring system.
- If this cannot be ensured, the output position must be verified with the desired mechanical position before starting the application.

The physical resolution of the measuring system can be changed using the scaling parameters. The measuring system supports the gear function for round axes.

This means that the ***number of steps per revolution*** and the quotient of `revolutions numerator/revolutions denominator` can be a decimal number.

The position value output is calculated with a zero point correction, the counting direction set and the gearbox parameter entered.

MEASURING LENGTH

Defines the ***total number of steps*** of the measuring system, before the measuring system starts at zero again.

Lower limit	2 steps
Upper limit	536 870 912 steps
Default	**536870912**

© TR Electronic GmbH 2023, All Rights Reserved

The actual upper limit value to be entered for the `measuring length` depends on the measuring system design and can be calculated using the formula below. As the value "0" is already counted as a step, the end value = measuring length in steps - 1.

Measuring range = steps per revolution * number of revolutions

For the purposes of calculation, the parameters ***Steps/revolution*** and ***Number of revolutions*** can be taken from the measuring system type plate.

NUMERATOR REVOLUTIONS / DENOMINATOR REVOLUTIONS

These two parameters together define the ***number of revolutions***, before the measuring system starts at 0 again.

As decimal numbers are not always finite (as is e.g. 3.4), but may have an infinite number of digits after the decimal point (e.g. 3.43535355358774...) the number of revolutions is entered as a fraction.

Numerator lower limit	1
Numerator upper limit	256000
Default numerator	65536

Denominator lower limit	1
Denominator upper limit	16384
Denominator default	**1**

Formula for gearbox calculation:

$$\text{Measuring range in steps} = \text{number of steps per revolution} * \frac{\text{Number of numerator revolutions}}{\text{Number of denominator revolutions}}$$

If it is not possible to enter parameter data in the permitted ranges of numerator and denominator, the attempt must be made to reduce these accordingly. If this is not possible, it may only be possible to represent the relevant decimal number approximately. The resulting minor inaccuracy accumulates for real round axis applications (infinite applications with motion in one direction).
A solution is, for example, to perform adjustment after each revolution or to adapt the mechanics or gear ratio accordingly.

The parameter **Number of steps per revolution** may also be a decimal number, however the `measuring length` may not. The result of the above formula must be rounded up or down. The resulting error is distributed over the total number of revolutions programmed and is therefore negligible.

Preferably for linear axes (forward and backward motion):

The parameter `denominator revolutions` can be programmed as a fixed value of "1" for linear axes. The parameter `numerator revolutions` is programmed slightly higher than the required number of revolutions. This ensures that the measuring system does not generate an actual value jump (zero transition) if the travel is slightly exceeded. For the sake of simplicity, the full revolution range of the measuring system can also be programmed.

© TR Electronic GmbH 2023, All Rights Reserved

The following example serves to illustrate the approach.

Given:

Measuring system with 4096 steps/rev. and max. 4096 revolutions

Resolution 1/100 mm

Make sure that the measuring system is programmed in its full resolution and measuring range (4096x4096):
Measuring length in steps = 16777216,
Numerator revolutions = 4096
Denominator revolutions = 1
Move the mechanics to be measured to the left stop

Set measuring system to "0" by adjustment

Set the mechanics to be measured to the end position

Measure the mechanical distance covered in mm

Read off the actual position of the measuring system on the connected control

Assumed:

Distance covered = 2000 mm

Measuring system actual position after 2000 mm = 607682 steps

Derived:

Number of revolutions covered = 607682 steps / 4096 steps/rev.
= **148.3598633 revolutions**

Number of mm / revolution = 2000 mm / 148.3598633 revs. = **13.48073499mm / rev.**

For 1/100mm resolution this equates to a **number of steps / revolution** of **1348.073499**

Required programming:

Number of numerator revolutions = ***4096***
Number of denominator revolutions = ***1***

$$\text{Measuring range in steps} = \text{number of steps per revolution} * \frac{\text{Number of numerator revolutions}}{\text{Number of denominator revolutions}}$$

$$= 1348.073499 \text{ steps / rev.} * \frac{4096 \text{ numerator revolutions}}{1 \text{ denominator revolution}}$$

= ***5521709 steps*** *(rounded off)*

© TR Electronic GmbH 2023, All Rights Reserved

8.3.2.3 Speed format

Indicates the resolution at which the speed is calculated and output.

The speed is output signed, as a two's complement:

Counting direction setting = forward

Output positive, with clockwise rotation
(facing flange-mounting)

Counting direction setting = backward

Output negative, with clockwise rotation
(facing flange-mounting)

If the speed value range (-2147483648…+2147483647) is exceeded or not reached, the limit values (0x7FFF FFFF or 0x8000 0000) are output.

Selection	Value	Speed output	Default
rev/sec * factor	0	Output in [rev./second], multiplied by the factor set under the parameter *Speed factor*.	
rev/min * factor	1	Output in [rev./minute], multiplied by the factor set under the parameter *Speed factor*.	X
rev/hour * factor	2	Output in [rev./hour], multiplied by the factor set under the parameter *Speed factor*.	
steps/integration time	3	Output in [steps/ms] Resolution: scaled steps/rev.	

8.3.2.4 Speed factor

Indicates the factor value for the parameter *Speed format*.

Lower limit	1
Upper limit	1000
Default	**1**

© TR Electronic GmbH 2023, All Rights Reserved

8.3.2.5 Speed integration time

Indicates the integration time in [ms] for the *Speed format*, see page 72.

The parameter generally serves to calculate the speed, which is output via the cyclic process data. High integration times enable high-resolution measurements at low speeds. Low integration times show speed changes more quickly and are suitable for high speeds and high dynamics.

Lower limit	1 ms
Upper limit	1000 ms
Default	**100 ms**

Example

Given:
- Programmed resolution = 8192 steps per revolution
- Speed = 4800 revolutions per minute
- Integration time t_i = 50 ms = 0.05 s

Find:
- Output value in steps/integration time

$$\text{Number of steps / s} = \frac{8192 \text{ steps} * 4800 \text{ } \cancel{\text{rev.}}}{\cancel{\text{rev.}} * 60 \text{ s}} = \frac{655360 \text{ steps}}{1 \text{ s}}$$

$$\text{Number of steps / } t_i = \frac{655360 \text{ steps}}{1 \text{ s}} * 0.05 \text{ s} = 32768 \text{ steps}$$

Steps/integration time = 32768 steps / 50 ms

8.3.2.6 Speed filter strength

The output speed can be averaged using the `Speed filter strength` parameter. The averaging strength can be preset. You can also select whether the filtering is dynamically switched off in acceleration phases, see `Speed filter type` parameter described below. This means that the speed signal can quickly follow the actual course in the event of changes and is stable in the stationary range.

Data type	Bit range
Lower limit	0
Upper limit	10
Default	**0**

0: no filtering

1: weak filtering, high limit frequency

. . .

10: strong filtering, low limit frequency

© TR Electronic GmbH 2023, All Rights Reserved

8.3.2.7 Speed filter type

Also see the parameter `Speed filter strength` on page 73.

Selection	Value	Description	Default
static	0	The low-pass filter characteristic influences the speed actual value output, independently of the current movement or acceleration status of the drive.	X
dynamic	1	The low-pass filter characteristic is deactivated, as soon as the measuring system detects a significant change in acceleration in the speed signal. The low-pass filter is reactivated, as soon as the measuring system detects a uniform movement.	

8.3.2.8 Remote default value

Output of the NON-safe substitute position, if own channel is in error state.

Selection	Value	Default
no substitute value	0	
Unsafe substitute value	1	X

8.3.2.9 Linked to safe sensor

The `Linked to safe sensor` = `linked` setting allows you to define whether the NON-safety-related channel will be linked to the safety-related channel. In this case the settings for the position and speed of the safety-related channel are used and the prevailing settings in the NON-safety-related channel are ignored.

The preset function can only be executed in the safety-related channel, while the preset function in the NON-safety-related channel is disabled.

Selection	Value	Default
not linked	0	X
linked	1	

© TR Electronic GmbH 2023, All Rights Reserved

8.4 OPTION: “SSI” and “Incremental” child elements

The child elements for a parameterizable secondary interface can be configured in the second slot, if the measuring system is equipped with an appropriate secondary interface. The optional secondary interface can therefore also be parameterized in Automation Studio.

SSI child element:
`0x0000025C_TR-Electronic_CD_582_-EPL_ITF2_SSI.xdd`



Incremental child element:
`0x0000025C_TR-Electronic_CD_582_-EPL_ITF2_Incr.xdd`



© TR Electronic GmbH 2023, All Rights Reserved

8.4.1 SSI (synchronous-serial) parameters

The measuring system can optionally be equipped with a synchronous-serial absolute SSI interface, in addition to the POWERLINK interface.

MSB LSB

Position	Status	Sign of life	Checksum
max. 8…29 bits	max. 0…2 bits	max. 0…5 bits	max. 0…8 bits

Parameter	Description	Page
SSI channel	Channel selection 0: `Master channel` 1: Test channel	77
SSI coding	SSI output code 0: `binary` 1: gray	77
SSI number of bits	Number of SSI data bits (8…29) 00 1000: 8 00 1001: 9 . . . 01 1101: `29`	77
SSI mono time	Specification of SSI monoflop time t_M 0: 15 µsec 1: `20 µsec` 2: 35 µsec 3: 50 µsec 4: 500 µsec	77
SSI status bits	Number of status bits 0: `0` 1: 1 2: 2	77
SSI sign-of-life counter	Number of sign-of-life bits 0: `0` 1: 1 2: 2 3: 3 4: 4 5: 5	78
SSI checksum	0: `no parity` 1: even parity 2: odd parity 3: CRC8	78

© TR Electronic GmbH 2023, All Rights Reserved

8.4.1.1 SSI channel

Selection	Value	Description	Default
Master channel	0	SSI output: Actual position of master system	X
Test channel	1	SSI output: Actual position of test system	

8.4.1.2 SSI coding

Selection	Value	Description	Default
binary	0	SSI output is binary-coded	X
gray	1	SSI output is gray-coded	

8.4.1.3 SSI number of bits

The *Data bits* parameter defines the number of reserved bits for the measuring system position, and the number of required SSI clock pulses to the LSB of the data is also specified. Special bits such as status bits, sign-of-life bits or checksum bits are not included and are output in this order after the data bits.

Lower limit	8
Upper limit	29
Default	**29**

8.4.1.4 SSI mono time

Selection	Value	Description	Default
15 µs	0	SSI monoflop time = 15 µs	
20 µs	1	SSI monoflop time = 20 µs	X
35 µs	2	SSI monoflop time = 35 µs	
50 µs	3	SSI monoflop time = 50 µs	
500 µs	4	SSI monoflop time = 500 µs	

8.4.1.5 SSI status bits

The *Status bits* parameter defines the number of reserved bits for the status output.

Value	Description	Default
0	No status bits output	X
1	One-bit status output 0: No error 1: Error in master system or test system; depending on source	
2	Two-bit status output MSB bit = 0: No error MSB bit = 1: Error in master system LSB bit = 0: No error LSB bit = 1: Error in test system	

© TR Electronic GmbH 2023, All Rights Reserved

8.4.1.6 SSI sign-of-life counter

The *Sign-of-life bits* parameter defines the number of reserved bits for the sign-of-life output.

The sign-of-life counter is incremented depending on the scanning processes and inserted into the SSI frame. Monitoring of this incrementation by the control ensures that the newly transferred position value originates from a current scanning process.

Value	Description	Default
0	No sign-of-life bits output	X
1	1 bit sign-of-life (toggle bit)	
2	2 bit sign-of-life	
3	3 bit sign-of-life	
4	4 bit sign-of-life	
5	5 bit sign-of-life	

8.4.1.7 SSI checksum

The checksum is generally calculated over all useful data (position, status and sign-of-life) in the SSI frame and is always inserted in the SSI frame in the last position (LSB).

An incorrect checksum does not indicate a measuring system error, but a communication problem. The cause may be an EMC fault, for example. However, communication problems in SSI interfaces can also be caused by excessively long cables or excessively high SSI scanning frequencies.

Selection	Value	Description	Default
No parity	0	No checksum output	X
Even parity	1	The parity represents the checksum of the bits in the SSI data word. If the SSI data word contains an odd number of ones, the bit is = "1" and changes the checksum to even parity.	
Odd parity	2	The parity represents the checksum of the bits in the SSI data word. If the SSI data word contains an even number of ones, the bit is = "1" and changes the checksum to odd parity.	
CRC8	3	8-bit CRC checksum Polynomial: $X^8 + X^5 + X^4 + 1$ (Maxim/Dallas) Start value: 0xFF Min. Hamming distance: 4	

© TR Electronic GmbH 2023, All Rights Reserved

8.4.2 Incremental parameters

The measuring system can optionally be equipped with an incremental interface, in addition to the POWERLINK interface.

8.4.2.1 Number of incr. pulses

Selection	Value	Description	Default
1024 pulses	1024	The number of pulses is set to 1024	X
2048 pulses	2048	The number of pulses is set to 2048	
3072 pulses	3072	The number of pulses is set to 3072	
4096 pulses	4096	The number of pulses is set to 4096	
5120 pulses	5120	The number of pulses is set to 5120	

© TR Electronic GmbH 2023, All Rights Reserved

9 Output of Forced Variable Values (Substitute Values)

The safety function requires that in the case of an error in the safety-related openSAFETY channel, instead of the cyclically output values **the forced data (0)** are used in the following cases. This state is reported by the openSAFETY Configuration Manager with the module status `SafeModuleOk=FALSE`.

- on start-up of the safety-related system
- in the case of errors in the safety-related communication between control and measuring system via the openSAFETY protocol
- if the value set for the `window increments` under the safety-related parameters is exceeded and/or the internally calculated openSAFETY frame is defective
- if the permissible ambient temperature range specified under the corresponding article number is not reached or is exceeded
- technical hardware faults in the measuring system

The process data channel addressable via POWERLINK is not necessarily affected by this. If the internal diagnosis of the single-channel position acquisition does not detect an error, the process data are still output. This state is reported by the NON-safety-related control part with the module status `SafeModuleOk=TRUE`. However, these data are not safe for the purposes of a safety standard.

If the internal diagnosis of the single-channel position acquisition detects an error, **forced values (1)** are also used for the NON-safety-related channel and reported with the module status `ModuleOk=FALSE`.

© TR Electronic GmbH 2023, All Rights Reserved

10 Troubleshooting and Diagnosis Options

10.1 Optical displays

For assignment and position of the status LEDs, see chapter “Bus status display” on page 28.

10.1.1 Link status, PORT1: LED1; PORT2: LED2

green LED	Cause	Solution
off	Voltage supply absent or too low	- Check power supply, wiring - Is the voltage supply in the permissible range?
	No Ethernet connection	Check cable
	Hardware error, measuring system defective	Replace measuring system
on	Measuring system ready for operation, Ethernet connection established	-

10.1.2 POWERLINK status, LED3

red LED	Cause	Solution
off	All OK, node is in state *NMT_CS_OPERATIONAL* (NMT_CT7)	Normal operating state
	If after entering the state *NMT_CS_NOT_ACTIVE* the node does not receive an SoC, PReq, PRes or SoA frame within the defined timeout, the node changes to the state *NMT_CS_BASIC_ETHERNET* (NMT_CT3).	The time for the timeout is defined in object 1F99h: NMT_CNBasicEthernetTimeout_U32. Default value = 5 s. The information provided must be followed.
	A hardware or local software RESET was performed. The node is re-initialized and changes to the state *NMT_GS_INITIALISING* (NMT_GT2).	The node must be restarted again in accordance with the state machine.
on	The node was put into the “Error Condition” state (NMT_CT11) due to an internal error. Causes for this can be CRC errors or loss of a frame.	- In order to localize the error, the error code returned in the StatusResponse frame must be analyzed. If necessary, the limit value (threshold) must be adapted in the relevant objects.
	The node was put into the “Internal Communication Error” state (NMT_GT6) due to an internal error. Causes for this can be Tx/Rx Buffer underrun/overflow errors or collision errors.	- In order to localize the error, the error code returned in the StatusResponse frame must be analyzed. If necessary, the limit value (threshold) must be adapted in the relevant objects.

© TR Electronic GmbH 2023, All Rights Reserved

10.1.3 openSAFETY Status, LED4

green LED	Cause	Solution
off	Measuring system is in initialization or switched off	-
	Voltage supply absent or too low	- Check power supply, wiring - Is the voltage supply in the permissible range?
	Hardware error, measuring system defective	Replace measuring system
Single flash	Measuring system is in PRE-OPERATIONAL state; this also occurs during power-up	- Life guarding timeout? -> Check life guarding parameter (100Ch) - Failed configuration or parameterization? -> Check parameter, perform restart - Node-ID incorrectly configured? -> Check Node-ID
Double flash	Existing network connection (OPERATIONAL) to safety control was interrupted --> ConnectionValid bit was reset	Check complete wiring between measuring system and safety control
on	OPERATIONAL	Normal operating state

red LED	Cause	Solution
on **(green = off)**	**A safety-relevant error was detected, the measuring system was put into fail-safe status and is outputting forced data:**	**In order to restart the measuring system after a safety-related, the error must generally be eliminated first of all and then the supply voltage switched OFF/ON.**
	– Error in the safety-related communication	– Try to localize the error with the aid of diagnostic mechanisms (control-dependent) – Check that the set timeout times are suitable for the automation task – Check whether the connection between safety control and measuring system is faulty
	– The set value for the `window increments` parameter was exceeded	– Check that the set value for the `window increments` parameter is suitable for the automation task, see chapter “Window increments” on page 59
	– The the permissible ambient temperature range specified under the corresponding article number is not reached or is exceeded	– Suitable measures must be taken to ensure that the permissible ambient temperature range can be observed at all times
	– The measuring system was supplied with >36 V DC for longer than 200 ms	– The measuring system must be shut down immediately and checked in the factory. When sending the measuring system to the factory, the reasons and circumstances relating to the overvoltage must be specified
	– The internally calculated openSAFETY frame is defective	– Power supply OFF/ON. If the error persists after this measure, the measuring system must be replaced
	– Double magnetic scanning system: the electrically permissible speed defined in the Safety Manual was exceeded	– Bring speed into the permissible range. Acknowledge error via Supply voltage OFF/ON

© TR Electronic GmbH 2023, All Rights Reserved

10.2 Manufacturer-specific diagnosis (POWERLINK object)

The measuring system supports the following manufacturer-specific diagnosis object:

Index	Subindex	Comment	Type	Attr.
2200h	0	No. of entries	UNSIGNED8	ro
	1	Manufacturer-specific diagnosis	OCTET STRING	ro
	2	Manufacturer-specific diagnosis	OCTET STRING	ro
	3	Manufacturer-specific diagnosis	OCTET STRING	ro
	…	…	…	…
	38	Manufacturer-specific diagnosis	OCTET STRING	ro

Octet Strings are simple UNSIGNED8 arrays with a length of 32 bytes.

The error must be eliminated as described in chapter "Optical displays". If the error cannot be eliminated, the diagnostic codes can be sent to TR-Electronic for evaluation, stating the article number.

© TR Electronic GmbH 2023, All Rights Reserved

10.3 Reading security logs

The `Event Log` is used to detect manipulations of the measuring system during normal operation. The user can record an initial state using acyclic data exchange. Manipulations are detected when a comparison of the initial state with the current state during repeated read operations results in differences. The time interval for the repetitions is determined by the application's safety requirements.

The following user actions are logged:
- Firmware updates
- Changes to the IP address

User actions are documented and stored by the measuring system. The `Event Logs` generated in this process can be read via the fieldbus system. These are 32-byte data blocks. The data is stored in big-endian format.

Event	**Counter**	**Event info**	**Firmware version**	**Time stamp [0.1s]**	**Power-on counter**	**Operating hours [0.1h]**	**Additional info** (bus-dependent)	**reserved**	**CRC32**
16 Bit	16 Bit	32 Bit	16 Bit	24 Bit	24 Bit	24 Bit	32 Bit	40 Bit	32 Bit

10.3.1 "Firmware update" event

Each firmware update and each update attempt is logged, and the event counter is incremented. The most recent log entry can be read via object `0x2200` with subindex 40:

Logging event no.:	0xE000
Counter:	Event counter
Event info:	0: Update start 1: Update completed successfully
Additional info:	Error word

10.3.2 "Change IP address" event

During the measuring system's startup, the switch position is read, stored, and applied to the application. If the switch position changes, the measuring system logs this event along with the current switch position. The most recent log entry can be read via object `0x2200` with subindex 41:

Logging event no.:	0xE020
Counter:	Event counter
Event info:	new IP address

© TR Electronic GmbH 2023, All Rights Reserved

11 Checklist, Part 2 of 2

We recommend that you print out and work through the checklist for commissioning, when replacing the measuring system and when changing the parameterization of a previously accepted system and store it as part of the overall system documentation.

Documentation basis	Date	Edited	Checked

Sub-item	To note	Can be found under	yes
Present user manual has been read and understood	–	Document no.: TR-ECE-BA-GB-0169	☐
Check that the measuring system can be used for the present automation task on the basis of the specified safety requirements	• Safety functions of the fail-safe processing unit • Compliance with all technical data	• Chapter Safety functions of the fail-safe processing unit, page 14 • Product data sheets https://www.tr-electronic.com/s/S025323	☐
Voltage supply requirement	• The power supply used must meet the requirements of SELV/PELV (IEC 60364-4-41:2005)	• Chapter Supply voltage, page 17	☐
Correct - electrical installation (shielding) - network installation	• Observance of basic rules for installation • Observance of wiring standards and directives specified by the POWERLINK User Organization	• Chapter Installation / Preparation for Commissioning, from page 15 • Chapter Commissioning, page 26	☐
System test after commissioning and parameterization	• During commissioning and after each parameter change all affected safety functions must be checked	• Chapter Parameterization - Modular Measuring System, from page 57	☐
Preset adjustment function	• The preset adjustment function may only be executed in the Legacy profile when the affected axis is stationary • It must be ensured that the preset adjustment function cannot be inadvertently triggered • After execution of the preset adjustment function the new position must be checked before restarting	• Chapter (Legacy Profile) Preset adjustment function, page 39 • Chapter (TR Profile) Preset adjustment function, page 45	☐
Device replacement	• It must be ensured that the new device corresponds to the replaced device • The new device must be acknowledged in the openSAFETY Configuration Manager (different `Unique Device Identification` is detected by the openSAFETY Configuration Manager) • All affected safety functions must be checked	• Safety Manual (Checklist Part 1 of 2) • Chapter Parameterization - Modular Measuring System, from page 57	☐

© TR Electronic GmbH 2023, All Rights Reserved

12 Appendix

12.1 POWERLINK certificate

Download

- http://www.tr-electronic.de/f/TR-ECE-TI-GB-0402

12.2 EU Declarations of Conformity

Download, FS02

- http://www.tr-electronic.de/f/TR-ECE-KE-DGB-0354

Download, FS03

- http://www.tr-electronic.de/f/TR-ECE-KE-DGB-0358

© TR Electronic GmbH 2023, All Rights Reserved